International Journal of Power Electronics and Drive System (IJPEDS)
Vol. 7, No. 4, December 2016, pp. 1212~1220
ISSN: 2088-8694, DOI: 10.11591/ijpeds.v7i4.pp1212-1220

Design of a Grid-connected Photovoltaic Inverter with Maximum Power Point Tracking using Perturb and Observe Technique

M. Abdur Razzak[1], Wahida Taskin Bhuiyan[2], Nawrin Islam Natasha[3], A.K.M. Muzahidul Islam[4], Muhamad Kamal Mohammed Amin[4]
[1]Department of Electrical and Electronic Engineering, Independent University, Bangladesh, Dhaka, Bangladesh
[2]Department of Engineering and the Environment, University of Southampton, United Kingdom
[3]Department of Electrical Engineering, University of Texas at Arlington, United States
[4]Department of Electronic Systems Engineering, MJIIT, Universiti Teknologi Malaysia, Kuala Lumpur, Malaysia

Article Info

Article history:

Received Apr 4, 2016
Revised Nov 9, 2016
Accepted Nov 21, 2016

Keyword:

Boost converter
Grid-tie inverter
H-bridge inverter
MPPT
P & O
SPWM

ABSTRACT

There is no easy way to convert Photovoltaic (PV) energy with high efficiency due to dynamic changes in solar irradiance and temperature. This paper illustrates a control strategy to design and implementation of Maximum Power Point Tracking (MPPT) in a photovoltaic system using Perturb and Observe (P&O) algorithm. The PSIM simulation results confirm proper functioning of the proposed MPPT sub-circuit to achieve a constant 48V DC output from fluctuating voltage of solar panel by varying duty cycle of the MOSFET in the 24V-48V boost converter. The filtered output waveform of the SPWM driven H-bridge inverter via the L-C low pass filter is found to be a pure sine-wave of 48V peak which is then stepped-up 312V peak (220V rms) by using a step up transformer. The frequency of output voltage is found to be 50Hz with a total harmonic distortion (THD) of 0.001 which is much lower than the IEEE 519 standard.

Corresponding Author:

M Abdur Razzak,
Department of Electrical & Electronic Engineering,
Independent University,
Plot-16, Block-B, Bashundhara, Dhaka-1230, Bangladesh.
E-mail: razzak@iub.edu.bd

1. INTRODUCTION

In today's world where the energy demands are increasing in every minute and the environmental conditions are degrading, generation of electricity efficiently and in a greener way is essential. Due to the availability and its clean nature, solar energy is one of the most favorable forms of renewable energy. Photovoltaic (PV) systems [1-4] are constantly being improved to be more efficient. As the outputs of the solar panel are irregular and fluctuate with changing irradiance, optimal operations of the panels are required. Maximum Power Point Tracking (MPPT) techniques [5-6] are used in photovoltaic systems to maximize the PV array output power in irregular conditions. MPPT is a fully electronic system that tracks the maximum power point of a PV module and tries to keep it at that point. The concept is to continuously monitor the terminal voltage and current, calculate the change in power simultaneously and then to take necessary steps to achieve Maximum Power Point [7-8]. A DC-DC converter with MPPT algorithm based circuit is used between PV module and DC-AC converter to extract maximum available power.

A lot of research efforts have been made to achieve faster, better and accurate MPPT techniques under changing irradiation, varying temperature and load. Several algorithms exist for tracking MPP like Perturb and Observe (P&O) [5-8], Incremental Conductance (InCon) [9], Neural Network, Current Sweep, Fuzzy Logic [10-12] Methods.

This paper illustrates a control strategy for MPPT in a photovoltaic system using the P&O method due to its straightforward, easy implementation and high performance characteristics as described in section 2B. The proposed photovoltaic system consists of a solar panel, a DC-DC boost converter [13-17], an MPPT sub-circuit to drive the boost converter, a DC-AC H-bridge inverter [18], an SPWM control circuit [19-21] to operate the inverter, a step-up transformer and a low pass LC filter to produce harmonics free output with a fundamental frequency of 50 Hz.

2. PROPOSED SYSTEM

2.1 Photovoltaic Panel Modeling

For modeling the photovoltaic panel, two physical models of solar modules are placed in series using capacitors and reverse parallel diodes to provide the desired input to the system. The solar panel used here is Resun Solar Energy's solar panel [22] under Standard Test Condition (STC). At STC condition of 25º temperatures, and irradiance of 1000 W/m, the panel is simulated to give an output voltage of 24V. The design parameters of the solar system are listed in Table 1. Moreover, a triangular voltage source of 24 V_{p-p} is put in parallel with the panels to demonstrate the varying nature of panel voltage.

Table 1. Design parameters of solar system

Parameter	Value
Number of cells	60
Standard Light Intensity, S_0	1000W/m^2
Reference Temperature, T_{ref}	25^0C
Series Resistance, R_s	0.0155Ω
Shunt Resistance, R_{sh}	1000Ω
Short Circuit Current, I_{sc}	8.68
Temperature Coefficient, C_t	0.005454

2.2 Photovoltaic Panel Modeling

In the Perturb and Observe (P&O) method the operating voltage or current is perturbed and then power is measured. The power calculated is observed to decide the direction of further changes in the voltage or current. If change in power is positive then the voltage change is done in the same direction by a constant K. On the other hand, if the power change is negative then change in voltage is done in the opposite direction by a constant K. The flowchart of the P&O algorithm is drawn in Figure 1. Here we proposed a simple analog subcircuit using logic gates to implement P&O technique as shown in Figure 2. This analog subcircuit is suitable for them who are not familiar or feels uneasy with the microcontroller coding.

Here, logic '1' is set for 'yes' in the algorithm and logic '0' is set for 'no' [5]. The summarized truth table of logic is listed in Table 2, with V_n+K=0 and V_n–K=1. Initially, this sub-circuit measures instantaneous voltage (V_n) and current (I_n) and multiplies them to find the power (P_n) of the solar panel. The differentiator calculates the change in power (dP) which can either be positive or negative, and feeds it to the comparator to get either logic 0 or logic 1. The second differentiator calculates the change in voltage and repeats the same operation. The logic values from both these conditions are given as input to XOR gate. The input logic combination activates either dP>0 or dP<0 and this turns on the desired switch for either addition or subtraction of voltage to or from the input voltage. The total voltage is then passed on to the third comparator which compares it with a DC reference voltage. The output of this comparator is the PWM control signal which is used to operate the boost converter. The PSIM circuit shown in Figure 2 demonstrates the P&O method. The proposed MPPT sub-circuit helped to achieve the constant 312V_{peak} ac at the inverter output from the fluctuating solar panel voltage (~24V) by varying duty cycle of the boost converter.

Figure 3(a) shows the 24 V_{p-p} triangular input voltage (V_n) which represents the fluctuating voltage of the solar panel and the Figure 3(b) shows the pulsating input power (P_n). The output voltage from the summer (V_{sum}) and a DC reference voltage (V_{ref}) are demonstrated in Figure 3(c). For clear verification, the frequency of V_n is chosen to be low as 200 Hz and the simulation time is fixed to 0.008s. These three figures help to understand the P&O algorithm. Since both voltage and power are increasing till approximately 0.0025s, V_n becomes incremented by 5V as K is given as 5V in the sub-circuit. Here K is considered as a high value just to help in verifying the function of the P&O algorithm. After that as the voltage is decreasing while power is increasing, 5V gets decremented from V_n. This addition and subtraction of voltage from instantaneous input voltage depending on the combinations result in the graph in Figure 3(c). The reference

voltage (V_{ref}) is taken as 14V. The PWM signal generated by the process is shown in Figure 3(d), which is used for switching the boost converter. In our design, as the voltage and power from the solar panel varies, the duty cycle of switches also varies accordingly, as shown in Figure 3(d), using the MPPT control mechanism to achieve the constant desired output voltage and power.

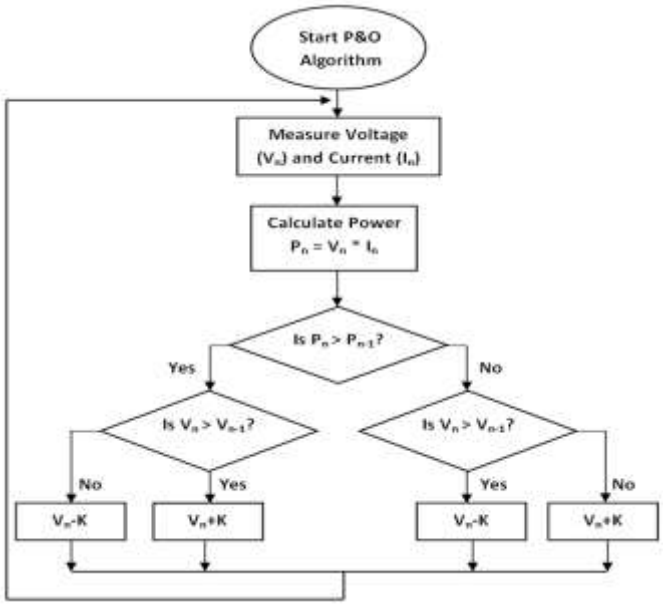

Figure 1. Flow chart of P&O algorithm

Table 2. P & O truth table

Condition	Logic			
Pn > Pn-1	1	1	0	0
Vn > Vn-1	1	0	1	0
Vn + K=0; Vn - K=1	0	1	1	0

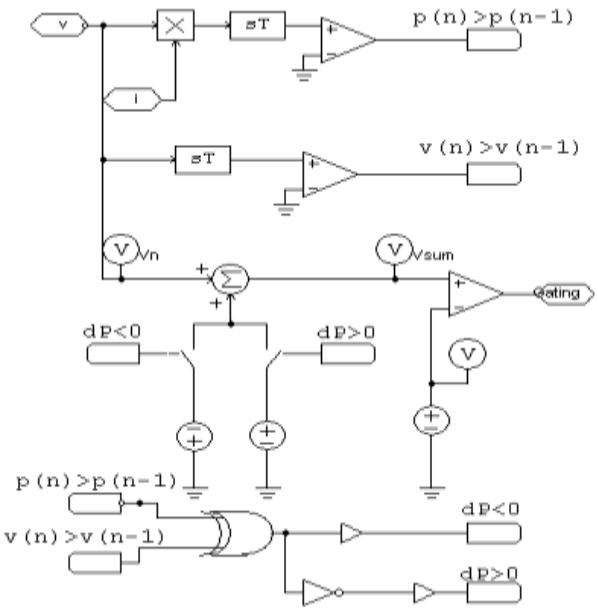

Figure 2. Schematic diagram of MPPT in PSIM

2.3 Design of DC-DC Boost Converter

A boost converter has been designed and implemented to the proposed system to step up the unregulated voltage of the photovoltaic panel (~24V dc) to 48V DC, which is finally stepped up to a desired output voltage for grid application ($312V_{peak}$ ac or $220V_{rms}$) by using a step-up transformer. Figure 4 shows the boost regulator using a MOSFET switch. The boost converter output (V_{boost}) of 48V from a varying dc source (~24V) is demonstrated in Figure 5. Pulse width modulation (PWM) of gating signal is done using the MPPT control strategy as described in section 2.2 and applied to the transistor. As the voltage varies, the duty cycle also varies accordingly to produce the constant desired output voltage. The designed parameters for the boost converter are listed in Table 3.

Table 3. Boost Converter's Parameters

Symbol	Actual Meaning	Value
V_{in}	Given input voltage	24V
V_{out}	Desired average output Voltage	48V
f_s	Minimum switching frequency	20KHz
D	Duty cycle	0.5
I_{LMax}	Maximum inductor current	500A
ΔI_L	Estimated inductor ripple current (2.6% of I_{LMax})	5A
ΔV_{out}	Desired output voltage ripple (0.1% of V_{out})	0.1V
I_{out}	Maximum output current(V_{out}/R)	4.8A

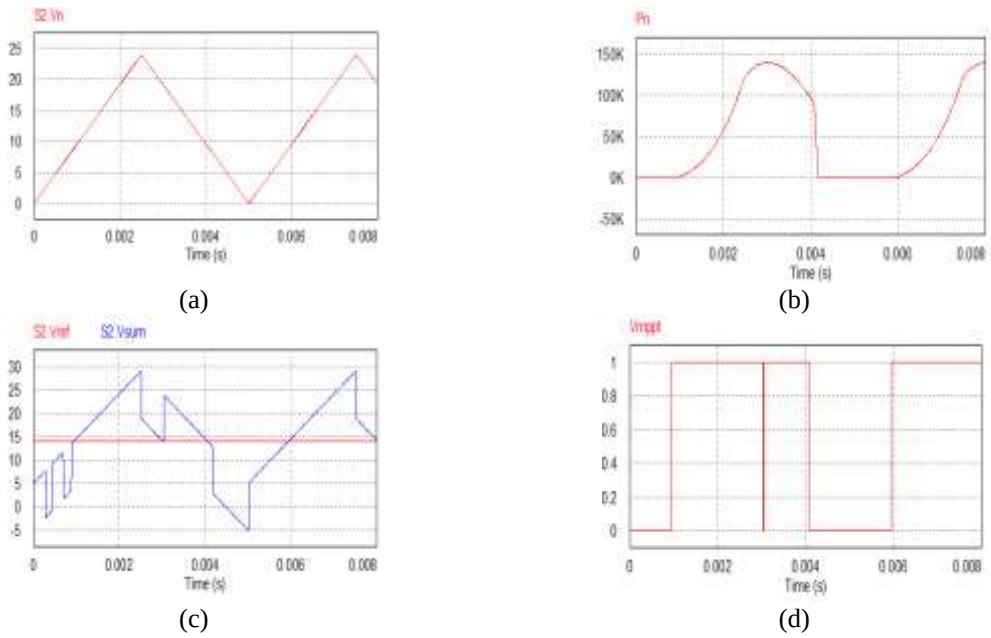

Figure 3. (a) Triangular input voltage, (b) input power, and (c) the summer and reference voltages (d) PWM pulses to the boost converter

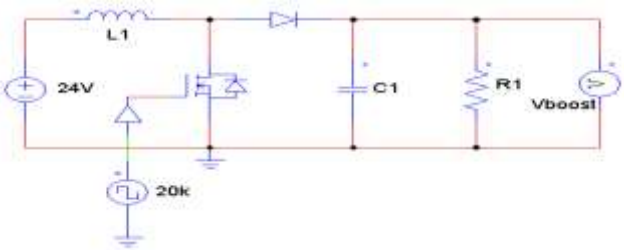

Figure 4. Boost converter

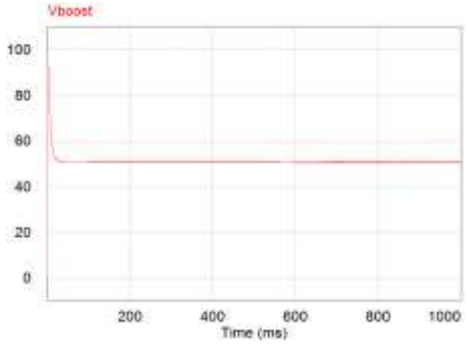

Figure 5. Boost converter output

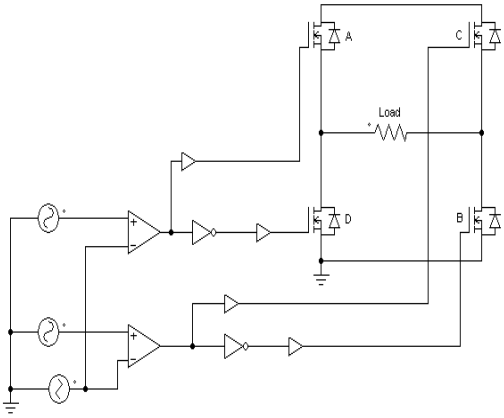

Figure 5. H-bridge inverter with control circuit

2.4 H-Bridge Inverter

The H-bridge inverter [29-30] as shown in Figure 6 is used to convert the 312V DC voltage of the boost converter to $312V_{peak}$ AC ($220V_{rms}$) voltage which matches the specifications for grid connection [6]. Sinusoidal pulse width modulation (SPWM) is used for operating the four transistors A, B, C, D.

In order to generate gating signals, a sinusoidal reference signal (V_r) is compared with a high frequency triangular wave (V_c) called carrier signal. A 20 KHz frequency of V_c is considered for this model. The value of the inverter output increases with an increase of modulation index, which is the ratio of two signals expressed by the following equation:

$$M = \frac{V_r}{V_c} \tag{1}$$

2.5 Design of LC Low-Pass Filter

An LC low pass filter has been employed in the proposed system to prevent harmonics from being injected to the grid. The requirement of the national grid of Bangladesh is $312V_{peak}$ or $220V_{rms}$ with 50Hz frequency. For a characteristic impedance of 30Ω and a cut-off frequency of 50Hz, the inductor capacitor values are calculated by applying the equations (2) and (3) and are used in the proposed system.

$$R = X_c = \frac{1}{2\pi f C} \tag{2}$$

$$f_c = \frac{1}{2\pi\sqrt{LC}} \tag{3}$$

The capacitor value of *LC* low-pass filter is calculated using equation (2) as

$$C = \frac{1}{2\pi f R} = \frac{1}{2\pi \times 50 \times 30} = 106\mu F$$

Putting the value of capacitor in equation (3), the inductor value of *LC* low-pass filter is calculated as

$$L = \frac{1}{(2\pi)^2 f^2 C} = \frac{1}{(2\pi)^2 \times (50)^2 \times 106 \times 10^{-6}} = 95.58mH$$

The 48V output of the low-pass filter is stepped up by using a step-up transformer as shown in Figure 7 to have the peak output voltage of 312V or an rms voltage of 220V, which is the single-phase grid voltage in Bangladesh.

3. RESULTS AND DISCUSSIONS

The complete schematic of the proposed PV system for PSIM (Power SIMulation Software) simulation is depicted in Figure 7. The output of the H-bridge inverter is shown in Figure 8(a) which is

distorted and contains high frequency components with a total harmonic distortion (THD) of 0.707. In order to reduce the harmonics at the output, the low pass L-C filter is designed and integrated with the proposed PV system. Figure 8(b) shows a pure sinusoidal output voltage of $220V_{rms}$ at a frequency of 50Hz, which emerges after passing through the low-pass LC filter. The THD is found to reduce significantly from 0.707 to 0.001 after filtering, which is much lower than the IEEE 519 standard.

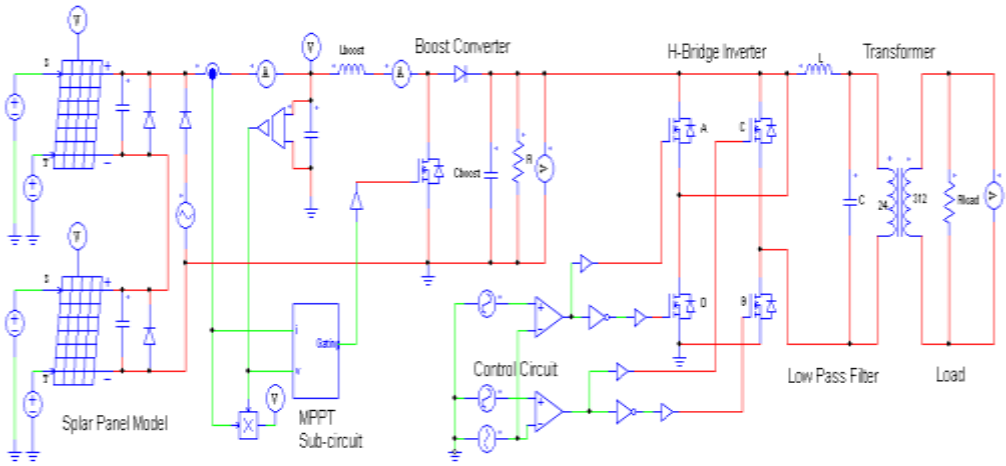

Figure 7. Complete PSIM circuit of proposed PV system

The THD is calculated using the following equation:

$$THD = \frac{\sqrt{\sum Harmonics^2}}{Fundamental\ Voltage} \tag{4}$$

The Fast Fourier Transform (FFT) of the inverter output before filtering and after filtering can be seen from Figure 9(a) and (b), respectively. The FFT reveals that before filtering additional harmonic spectra is present with fundamental harmonic component at 50 Hz. However, after filtering the higher harmonics are seen to disappear with only the 50 Hz component remaining. This indicates that a pure sinusoidal wave has been generated.

The performance of the proposed photovoltaic inverter is tested by varying the output load from 5Ω to 100Ω at an interval of 5Ω as shown in Figure 10. The testing result shows that the output current remains almost constant with changing load, which confirms the applicability of the proposed PV system for dynamic loads.

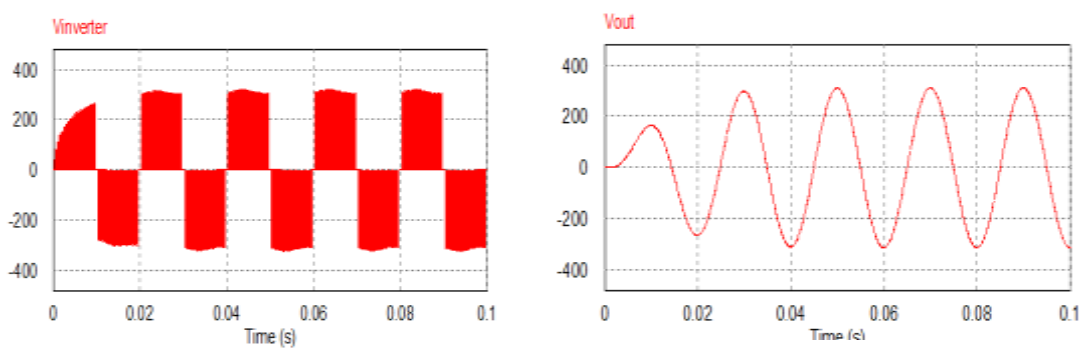

(a) (b)

Figure 8. (a) Output voltage before filtering and (b) after filtering

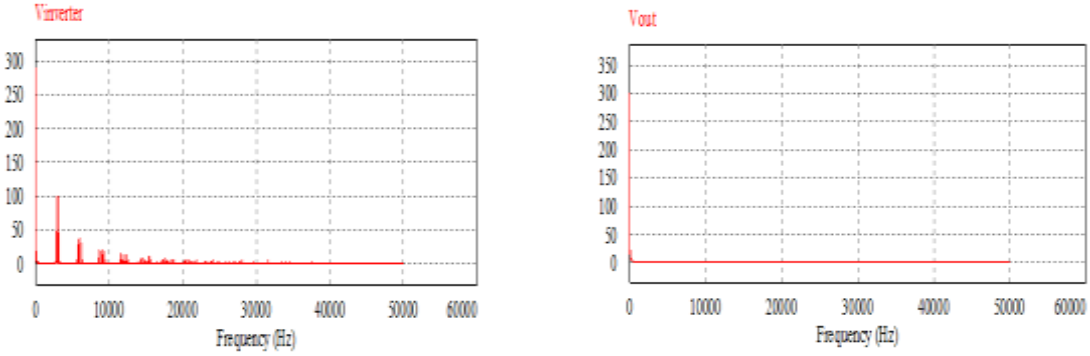

(a) (b)

Figure 9. FFT of the inverter voltage (a) before filtering and (b) after filtering

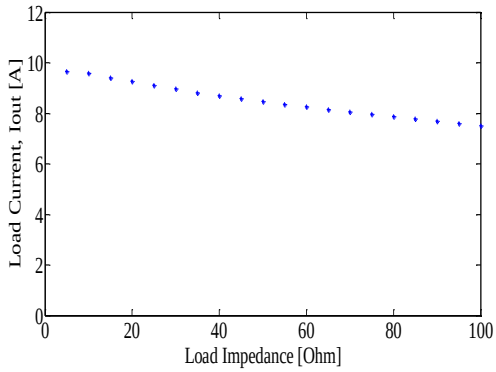

Figure 10. Output current variations with increasing load

4. CONCLUSION

This paper puts forward the design and simulation of a transformer-less PV system with an integrated maximum power point tracking (MPPT) with a sub-circuit using simple logic gates. This simple design of MPPT sub-circuit will be helpful for the researchers who are not familiar with the microcontroller coding. The designed MPPT circuit satisfies all the conditions of the P&O algorithm and accurately adds or subtracts **K** to the input voltage as per demand of the situation to produce the output voltage as a perfect sinusoidal wave with $220V_{rms}$ and 50 Hz. The THD is found to be a significantly small value of 0.001 after filtering, which is much lower than the IEEE 519 standard. FFT of the inverter output before and after filtering demonstrate the effectiveness of the filter. The output current remains almost constant with changing load, which confirms the applicability of the proposed PV system for dynamic loads.

REFERENCES

[1] Ramos Hernanz *et al.*, "*Modeling of Photovoltaic Module*", Proc. International Conference on Renewable Energies and Power Quality (ICREPQ'10), 23-25 March, 2010, Granada, Spain.

[2] M.G. Villalva *et al.*, "Comprehensive approach to Modeling and Simulation of Photovoltaic Arrays", *IEEE Transactions on Power Electronics*, Vol. 25, No. 5, pp. 1198-1208 (2009).

[3] Huan-Liang Tsai *et al.*, "*Development of Generalized Photovoltaic Model Using MATLAB/SIMULINK*", Proceedings of the World Congress on Engineering and Computer Science 2008 (WCECS 2008), 22 - 24 October, 2008, San Francisco, USA.

[4] M.G. Villalva *et al.*, "Modeling and Circuit-based Simulation of Photovoltaic Arrays," *Brazilian Journal of Power Electronics*, Vol. 14, No. 1, pp. 35-45 (2009).

[5] M. Berrera *et al.*, "*Experimental Test of Seven Widely-Adopted MPPT Algorithms",* Proc. IEEE Bucharest Power Tech Conference, June 28 - July 2, 2009, Bucharest, Romania.

[6] T. Esram *et al.*, "Comparison of Photovoltaic Array Maximum Power Point Tracking Techniques," *IEEE Transactions on Energy Conversion*, Vol. 22, No. 2 (2007).

[7] D. Sera *et al.*, "*Improved MPPT Algorithms for Rapidly Changing Environmental Conditions*," Proc. 12th International Conference on Power Electronics and Motion Control, pp. 1614-1619 (2006).

[8] N. Femia *et al.*, "*Optimizing Sampling Rate of P&O MPPT Technique*," Proc. IEEE PESC, pp. 1945- 1949 (2004).
[9] Nawrin Islam Natasha *et al.*, "*Implementation of Maximum Power Point Tracking in a Photovoltaic Inverter using Incremental Conductance Technique*", Proc. 8th International Conference on Electrical and Computer Engineering (ICECE), December 20–22, 2014, Dhaka, Bangladesh.
[10] S. Rajasekar *et al.*, "*Modified Hill-top Algorithm Based Maximum Power Point Tracking for Solar PV Module*," 2012 IEEE International Symposium on Industrial Electronics (ISIE), pp. 1801-1806, 28-31 May 2012.
[11] M. T. Makhloufi *et al.*, "Maximum Power Point Tracker for Photovoltaic Systems using On-line Learning Neural Networks," *International Journal of Computer Applications*, Vol. 72, No. 10, pp. 0975-0987 (2013).
[12] Katherine A. Kim *et al.*, "Photovoltaic Converter Module Configurations for Maximum Power Point Operation", University of Illinois Urbana-Champaign Urbana, IL 61801, USA.
[13] Arun Kumar Verma *et al.*, "*An Isolated Solar Power Generation using Boost Converter and Boost Inverter*," Proc. National Conference on Recent Advances in Computational Technique in Electrical Engineering, 19-20 March, 2010, Longowal, India, Paper ID 3011, pp. 1-8.
[14] Athimulam Kalirasu *et al.*, "Simulation of Closed Loop Controlled Boost Converter for Solar Installation", *Serbian Journal of Electrical Engineering* Vol. 7, No. 1, pp. 121-130 (2010).
[15] N. Kasa *et al.*, "*A Transformer-less Single Phase Inverter using a Buck-boost Type Chopper Circuit for Photovoltaic Power System*" Proc. of ICPE'98, Seoul, Korea, pp. 978-981, 1998.
[16] R.O. Caceres *et al.*, "A Boost DC-AC Converter: Analysis, Design, and Experimentation," *IEEE Transactions on Power Electronics*, Vol. 14, No. 1, pp. 134–141 (1999).
[17] Sajib Chakraborty *et al.*, "*Design of a Single-Stage Buck and Boost Converters for Photovoltaic Applications*", Proc. 3rd IEEE International Conference on Informatics, Electronics and Vision (ICIEV-2014), 23-24 May 2014, Dhaka, Bangladesh.
[18] A.S.K. Chowdhury *et al.*, "*Design and Implementation of a Highly Efficient Sine-Wave Inverter for Photovoltaic Applications*", Proc. 2nd Intl Conference on Informatics, Electronics & Vision (ICIEV), May 2013.
[19] J.A. Santiago-Gonzalez *et al.*, "*Thre Phase Induction Motor Drive using Flyback Converter and PWM Inverter Fed from a Single Photovoltaic Panel,"* Proc. IEEE PES General Meeting, pp. 1-6, 2011.
[20] Y. Xue *et al.*, "*Closed-loop SPWM Control for Grid-Connected Buck-Boost Inveters",* Proc. IEEE PESC, 2004, Vol. 5, pp. 3366-3371.
[21] P.H. Zope *et al.*, "Design and Implementation of Carrier Based Sinusoidal PWM Inverter*", International Journal of Advanced Research in Electrical, Electronics and Instrumentation Engineering*, Vol. 1, Issue 4 (2012).
[22] http://www.alibaba.com/product-detail/240W-24V-Poly-Solar-Panel-with_1176369097.html? Spm = a2700.7724857.35.1.owruK-for - accessed on 14 September, 2015.
[23] Z. Zhao, "High Efficiency Single-Stage Grid-Tied PV Inverter for Renewable Energy System", Ph.D. Dissertation, Department of Electrical Engineering, Virginia Polytechnic Institute and State University, 2012.
[24] Sajib Chacraborty *et al.*, "Design of a Transformer-less Grid-Tie Inverter Using Dual-Stage Buck and Boost Converters", *International Journal of Renewable Energy Research*, Vol.4, No.1. pp. 91-98 (2014).
[25] A.S.K. Chowdhury *et al.*, "Design and Analysis of Transformerless Grid-Tie Buck-Boost Photovoltaic Inverter with Immittance Conversion Topology", *International Journal of Renewable Energy Research*, Vol. 4. No. 3, pp 539-547 (2014).
[26] Sajib Chakraborty *et al.*, "Design of a Transformer-less Grid Connected Hybrid Photovoltaic and Wind Energy System", 9th International Forum on Strategic Technology (IFOST), 21-23 October, 2014, Cox's Bazar, Bangladesh.
[27] A.S.K. Chowdhury *et al.*, "*Single-Phase Grid-Tie Photovoltaic Inverter Using Maximum Power Point Tracking with Flyback Converter",* 3rd IEEE International Conference on the Developments in Renewable Energy Technology (ICDRET), 9-11 January 2014, Dhaka, Bangladesh.
[28] A S K Chowdhury *et al.*, "*Design of a Single Stage Grid-Connected Buck-Boost Photovoltaic Inverter for Residential Application",* IEEE International Conference on Power and Energy System Towards Sustainable Energy (PESTSE), 19-21 March-2014, Bangalore, India, pp. 279-284.
[29] Arasakumar Sangari, R Umamaheswari, "Analysis of Impedance Source Inverter Topologies for Grid integration of PV inverters", *International Journal of Power Electronics and Drives*, Vol. 6, No. 4, pp. 797-807 (2015).
[30] Syamim Sanusi, Auzani Jidin, Tole Sutikno, Kasrul Abdul Karim, Mohd Luqman Jamil, "Implementation of Space Vector Modulator for Cascaded H-Bridge Multilevel Inverters", *International Journal of Power Electronics and Drives*, Vol.6, No.4, pp. 906-918 (2015).

BIOGRAPHIES OF AUTHORS

M. Abdur Razzak received his MEng and PhD degree in Electrical and Electronic Engineering from Nagoya University, Japan, in 2003 and 2006, respectively. Currently, he is working as an Associate Professor and Head of Electrical and Electronic Engineering Department at Independent University, Bangladesh (IUB). He has received a number of academic awards including University Gold Medal (1995), HKUST Fellowship (1999), Japanese Government Scholarship (2000-2006), IEEE Scholar Award (2005), Hori Information Promotion Award (2005), and Japan Society for the Promotion of Science (JSPS) Postdoctoral Fellowship Award (2008). He has published more than 120 research papers in peer-reviewed journals, and

international conference proceedings. He has been invited as a keynote speaker in a number of international conferences and foreign universities. He was the Organizing Chair of the 2013 & 2015 IEEE International Conference on Advances in Electrical Engineering and the Organizing Secretary of the 2011 International Conference on Advances in Electrical Engineering held in Dhaka, Bangladesh. He is also serving as the international program committee member and reviewer of nore than a dozen peer-reviewed journals and international conferences. He is serving as the expart member for graduate (MSc & PhD) examination committee both at home and abroda. He is also serving as an editorial board member of the online journal titled Recent Patents of Signal Processing. Currently he is serving as the mentor of IEEE IUB Student Branch and Advisor of IEEE IAS Student Chapter at IUB. His research interests include signal processing, power electronics and drives, embedded system, renewable energy technologies and smart grid. He is a member of IEEE.

Wahida Taskin Bhuiyan received her BS degree in Electrical and Electronic Engineering from North South University, Bangladesh and her MSc in Mechatronics from University of Southampton, United Kingdom. She is currently working as a part-time Lecturer at North South University and Independent University, Bangladesh. Her research interest lies in areas of Solar Energy Conversion, Photovoltaic Inverter, Maximum Power Point Tracking, Power Electronics, Microfluidics Technology, Mobile Healthcare Sensor, etc. Wahida was an Undergraduate Teaching Assistant and also the Vice President of IEEE North South University student branch during her undergraduate study.

Nawrin Islam Natasha received her Bachelor of Science in Electrical and Electronic Engineering from North South University, Dhaka, Bangladesh with *Magna Cum Laude* in 2014 and currently pursuing her M.Sc. in Electrical Engineering from University of Texas at Arlington, United States of America. Her concentrations in M.Sc. are Embedded Systems, Digital and Analog CMOS Design, MEMS and IC Fabrication. She worked as a Lab Instructor at North South University from 2014 till 2015 also in the meantime worked as a Research Assistant under Dr. M. AbdurRazzak. During her bachelor degree she worked as a Teaching Assistant at North South University for a year. She has a recent research paper publication at 8th International Conference on Electrical and Computer Engineering (ICECE), December 2014 which is indexed in IEEE eXplore. She was the recipient of 50% merit based tuition fee waiver during her undergraduate program and achieved *Daily Star Award* for outstanding results both in Ordinary Level and Advanced Level.

A.K.M. Muzahidul Islam was born in Bangladesh. He has received M.Sc. in Computer Science and Engineering from Kharkiv National University of Radio Electronics, Ukraine, in 1999 and D.Eng. in Computer Science and Engineering from Nagoya Institute of Technology, Japan in 2007. Dr. Muzahid has recieved Japanese Government Monbusho Scholarship (October 2002 - March 2006). He has worked in various industries in Bangladesh and Japan for around SIX and Half (6.50) years. Since January 2011, Dr. Muzahid is serving as a Senior Lecturer at Malaysia-Japan International Institute of Technology (MJIIT) of UniversitiTeknologi Malaysia (UTM), Kuala Lumpur. His research interests include Network Achitecture, Communication Protocol, Cognitive Radio Network, Wireless Sensor Network, and Network Security, whereas teaching interests include Programming for Engineers, Software Engineering, Data structure and Algorithm, Data Transmission, Network Engineering, etc. Dr. Muzahid has published over 60 international research publications (including peer-reviewed Journal and Conference Paper). He has secured several National and International Research Grants and spupervised 04 PhD students, 01 Masters student, and 02 BEng. Students through their graduation. He has served as the Secretariat of the 7TH AUN/SEED-Net 2014 Int'l Conference on EEE and is an Advisory Member of ICBAPS2015, Malaysia. He has also served as the Communication Track Chair at ICIEV15 and ICAEE 2015 Int'l Conferences. He is serving as the Secretariat of ICaTAS 2016 Int'l Conference, Malaysia and as the Program Chair of ICAICT 2016 Int'l Conference, Bangladesh. Dr. Muzahid is a Senior IEEE Member (SMIEEE) and is an IET Member with Designatory Letters (MIET).

Muhamad Kamal Mohammed Amin has completed BEng in Communication from Denki Tsushin University, Japan, MEngin Computer Science from Iwate University, Japan, and PhD in Electrical Engineering from Aberdeen University, Scotland. He has received Japanese Government Monbusho Scholarship Award 1996-1998 and JPA Look East Policy Scholarship Award 1982-1990. Currently he is serving as a Senior Lecurer at Malaysia-Japan Int'l Institute of Tehnology (MJIIT) of Universiti Teknologi Malaysia (UTM), Malaysia. He has also served as the Head of the Electronic Systems Engineering Department for Year 2013-2014.