International Journal of Cyber Society and Education
Pages 131-142, Vol. 1, No. 2, March 2008

Critical Success in E-learning: An Examination of Technological and Institutional Support Factors*

Maslin Masrom
Universiti Teknologi Malaysia
E-mail: maslin@citycampus.utm.my

Othman Zainon
Universiti Teknologi Malaysia
E-mail: othman08@citycampus.utm.my

Rosdina Rahiman
Universiti Teknologi Malaysia
E-mail: rosdina@citycampus.utm.my

ABSTRACT

In recent years, information technology (IT) has become prominent to support teaching and learning activities. IT tools allow us to create, collect, store and use information and knowledge. E-learning was one of the IT tools introduced at College of Science and Technology (CST), University Technology Malaysia (UTM) Kuala Lumpur since 2001. It has enabled a paradigm shift from institution-centered instruction to anywhere, anytime and anybody learning models. In CST the e-learning technology was used for accessing the syllabus and course content, submitting assignments, and taking class quizzes. This paper focuses on issues relating to the e-learning critical success factors (CSFs) from the university students' perspective. In this study, two main factors related to the e-learning CSFs within a university environment including technological and institutional support factors were examined. The confirmatory factor modeling approach was used to assess the criticality of the measures included in each factor. The results indicated that the most critical measures for technological factor in terms of ease of access and infrastructure are the browser efficiency, ease of use of course website and computer network reliability. Meanwhile, for institutional support factor, the most critical measure is the availability of technical support or help desk.

* An earlier version of the paper has been presented at The 2008 International Joint Conference on e-Commerce, e-Administration, e-Society, and e-Education (e-CASE 2008), March 27-29, 2008, Bangkok, Thailand.

Keyword: e-learning, critical success factors, technological factor, institutional support factor

INTRODUCTION

The explosive growth in information technology (IT) and new developments in learning science provides opportunities to create well-designed, learner-centered, meaningful distributed and facilitated e-learning environments (Khan, 2005). E-learning introduced since 1990s had improved teaching and learning styles, and qualities. There are many definitions given to e-learning, but here we define e-learning as "any learning that is done using an Internet or Intranet connection." E-learning represents an innovative shift in the field of learning, providing rapid access to specific knowledge and information, and offers online instruction that can be delivered anytime and anywhere through a wide range of electronic learning solutions such as a web-based courseware and online discussion groups. It can be viewed as making learning materials such as presentation slides available on the web. Nowadays e-learning has become an accepted educational paradigm across universities worldwide (OECD 2005).

Many higher education institutions (HEIs) in Malaysia commit themselves to e-learning because they believe in its effectiveness as an alternative approach to the traditional classroom method of spreading information widely (Raja Maznah, 2004). E-learning was one of the IT tools introduced at College of Science and Technology (CST), University Technology of Malaysia (UTM) since 2001 (Zainon et al., 2007). WebCT software was the first online learning software introduced to all academic staff in UTM. This software provides several teaching and learning functions such as download and upload electronic learning materials, record all students activities and online discussion and communication. In 2004, after three years using the WebCT, the top management and e-learning committee then decided to change the WebCT e-learning management system to the open source-based learning management system.

UTM has chosen Moodle™ system as the open source software system. Moodle which stands for Modular Object-Oriented Dynamic Learning Environment, has been developed using the basic pedagogy and social constructivist learning theory. The learning environment supported by Moodle was divided into four phases of work: (i) constructing, (ii) collaborating, (iii) creating, and (iv) sharing. With regard to this learning environment and activities in the system, universities can provide students with not only good understanding and creating new ideas, but also can share the idea and work in a

team.

In order to achieve the above objectives, universities have been making heavy investment in the implementation of e-learning programs. Despite the many uncertainties that occurred throughout the process, part of the teaching and learning processes are moving towards the Internet usage. These uncertainties bring about difficulties for academic administrators, who face the challenge of keeping focus on essential and relevant aspects that will assure the programs' success. Accordingly, full understanding of the factors contributing to the effectiveness of e-learning system is needed to help universities funding to effective factors and eliminate non-effective factors.

The objective of this study is to determine the critical success factors in e-learning acceptance by university from the students' perspective. The study aims at determining the critical measures or indicators within technological and institutional support factors using the confirmatory factor models. Thus, this study limited the e-learning CSF categories to technology and support factors only. The following part is the literature review. The latter sections are composed of the research methodology, the confirmatory factor modeling approach, results, discussion and conclusion.

LITERATURE REVIEW

Critical success factors (CSFs) are viewed as those activities and constituents that must be addressed in order to ensure its successful accomplishment. The term CSFs can be viewed as those things that must be done if an organization is to be successful, and CSFs should be few in number, measurable and controllable. E-learning CSFs include intellectual property, suitability of the course for e-learning environment, building the e-learning course, e-learning course content, e-learning course maintenance, e-learning platform, measuring the success of an e-learning course, evaluating the learning and the students' performance, technology, instructor, and research on previous use of technology.

Studies examining the framework of critical success factors (CSFs) could be briefly summarized as follows. Volery and Lord (2000) identified three main critical success factors (CSFs) in e-learning: technology (ease of access and navigation, interface design, level of interaction), instructor (attitudes towards students, technical competence, classroom interaction) and previous use of technology by the students. Soong et al. (2001) concluded that the main CSFs of e-learning are: human factors concerning the instructors (motivational skills, time and effort investment), technical competency of instructors and

students, constructivist mindset of instructors and students, high level of collaboration, user-friendly and sufficiently supported technical infrastructure.

Furthermore, Hassan (2002) pointed out that the concept of e-learning, as seen by the Malaysian Ministry of Education, includes systems that enable information gathering, management, access and communication in various forms. The first phase of e-learning project for most Malaysian HEIs is the acquisition of sufficient IT infrastructure to enable them to offer an excellent e-learning platform to students. Thus, the infrastructure for e-learning has become one of the attractions used by HEIs to compete in attracting students to enroll in their programs.

According to Selim (2005), e-learning CSFs within a university environment can be grouped into four categories such as instructor, student, information technology and university support. The effectiveness of e-learning can be determined by the instructional implementation of the information technology (IT). Selim's e-learning CSFs included attitude towards and control of technology, teaching style, computer competency, interactive collaboration, e-learning course content and design, ease of access, infrastructure and support.

E-learning integration into university courses is a component of the IT explosion, thereby IT is the engine that drives the e-learning revolution. The efficient and effective use of IT in delivering e-learning based components of a course is of critical importance to the success and student acceptance of e-learning. Hence, ensuring that the university IT infrastructure is rich, reliable and capable of providing the courses with the necessary tools to make the delivery process as smooth as possible is critical to the success of e-learning (Selim, 2005). In this context, IT tools comprise network bandwidth, network security, network accessibility, audio and video plug-ins, courseware authoring applications, Internet availability, instructional multimedia services, videoconferencing, course management systems, and user interface.

METHODOLOGY

Sample and Procedure

The data for this study were gathered by means of a survey questionnaire administered to 500 diploma students during the 2006/2007 session. The survey instructed students to provide feedback about their experiences with the e-learning system. The survey targeted first year students at the College of Science and Technology, and 274 responses were achieved, giving a 54.8% response rate. The profile of respondents is depicted in Table 1. The majority of the respondents were male (62.4%)

compared to female (37.6%), whose age range was within 17 to 22 years old. Respondents were grouped into 17 to 19 years (97.4%) and 20 to 22 years (2.6%), with a mean age of 18.76 years (SD = 0.49).

Table 1 Respondents Profile

Item		Frequency (n)	Percentage (%)
Gender	*Male*	*171*	*62.4*
	Female	*103*	*37.6*
Age (years)	*17 to 19*	*267*	*97.4*
	20 to 22	*7*	*2.6*

Instrument

The survey instrument consisted of three sections, one for each e-learning CSF category (including the technology and support constructs) and the demographic characteristics section. The technology construct section was comprised of thirteen items or indicators that measure the technology reliability, richness, consistency, and effectiveness. These thirteen indicators were adopted from Voley and Lord (2000) and Selim (2005). Meanwhile, the support construct were assessed by five indicators adopted from Selim (2005). The five indicators were developed to capture the effectiveness and efficiency of the university technical support, library services and computer laboratories reliability. All items used a five-point Lickert scale of responses: *1-Strongly Agree*, *2-Agree*, *3-Neutral*, *4-Disagree*, and *5-Strongly Disagree*. The mean and standard deviation of each indicator are shown in Table 2.

Data Analysis

The computer software used for analyzing data was AMOS Version 4.0. AMOS is an acronym for “Analysis of Moment Structures” or the analysis of mean and covariance structure. It is an easy-to-use program for visual structural equation modeling (SEM), developed by Arbuckle and Wothke (1999). AMOS is a graphic driven package to analyze quantitative data with SEM, and has become popular as an easier way of specifying structural models (Masrom, 2004). Its graphic aspect makes it simple for novices to understand and investigate causative relationships in data sets.

SEM goes beyond traditional statistical approaches, because it can confirm relationships and even help in gaining insights into the casual nature and strength of the relationships (Bollen, 1989; Bollen and Long, 1993). Maximum likelihood estimates

(MLE) of the measurement (or confirmatory factor) and structural models were made using AMOS. Goodness of fit was measured by the likelihood ratio chi-square (χ^2), RMR, GFI, AGFI, RMSEA, NFI, TLI and CFI (Kline, 2004).

Table 2 Descriptive statistics of technology and support indicators

Item / Indicator	Mean	Standard Deviation (SD)
T1: Easy on-campus access to the Internet.	2.62	1.10
T2: Did not experience problems while browsing.	3.04	0.99
T3: Browsing speed was satisfactory.	2.94	1.02
T4: Overall, the website was easy to use.	2.60	0.92
T5: Information was well structured/presented.	2.56	0.86
T6: I found the screen design pleasant.	2.60	0.80
T7: I could interact with classmate through the web.	2.49	0.92
T8: I could easily contact the instructor.	2.61	0.94
T9: I can use any PC at the university using the same account and password.	2.37	0.91
T10: I can use the computer laboratory for practicing.	2.44	0.89
T11: I can rely on the computer network.	2.51	0.95
T12: I can register courses on-line using Banner.	2.53	0.88
T13: Overall, the information technology infrastructure is efficient.	2.52	0.96
SP1: I can access the central library website and search for materials.	2.27	0.91
SP2: I can get technical support from technicians.	2.87	0.82
SP3: I think that the College of Science and Technology e-learning support is good.	2.55	0.95
SP4: There are enough computers to use and practice.	3.05	1.11
SP5: I can print my assignment and materials easily.	2.78	1.13

CONFIRMATORY FACTOR MODELING APPROACH

Confirmatory factor analysis (CFA) is theory driven (Albright, 2006). It is appropriately used when the researcher has some knowledge of the underlying latent variable structure. Based on knowledge of the theory, empirical research, or both, the

researcher postulates relations between the observed measures and the underlying factors a priori (in advance) and then tests this hypothesized structure statistically (Byrne, 2001). With CFA it is possible to place substantively meaningful constraints on the factor model, for example, setting the effect of one factor to equal zero on a subset of the observed variables.

This study considers estimating confirmatory factor models (CFMs) using AMOS. In general AMOS consists of two separate parts: the confirmatory factor model and the structural equation model (Byrne, 2001). After estimating a CFA, the next step is to assess how well the model matches the observed data. AMOS yields two types of information that can be helpful in detecting model misspecification or lack of fit, that is, the standardized residuals and the modification indices. In summary, CFA focuses solely on the link between factors and their measured variables, within the framework of SEM, it represents what has been termed a measurement (or confirmatory factor) model.

In this study, the CFMs approach was conducted to determine and justify or validate the underlying critical indicators in two e-learning CSFs categories, that is, technology and support. The aim of CFMs is to describe how well the indicators serve as critical measurement of e-learning CSFs categories (Selim, 2005).

RESULTS

The Technology Confirmatory Factor Model

Figure 1 shows the thirteen indicators (T1-T13) proposed to measure the technology construct (TECH) as a critical factor of e-learning acceptance by students. Standardized factor loadings or standardized validity coefficiency are shown in Figure 1 indicating moderate validity. The model yielded a Chi-square (χ^2) statistic of 327.5 on 65 degrees of freedom, has a small p-value indicating some lack of fit (Kline, 2004). Standardized residuals and modification indexes provided by AMOS output suggested that the six indicators T1, T2, T3, T4, T5 and T6 should be separated from the other technology indicators. Thus, the TECH confirmatory factor model was split into two models, that is, TECH1 and TECH2.

Figure 2 (a) and Figure 2 (b) show the two confirmatory factor models, TECH1 and TECH2. The observed AMOS fit measures satisfied the recommended values. This gives evidence to the validity of the indicators used to capture the technology factor. TECH1 factor, as shown in Figure 2 (a) included the indicators related to technology access (T1), navigation (T2, T3, and T4), and interface efficiency (T5 and T6). TECH1 confirmatory factor model was examined and yielded good fit measures and achieved the

recommended levels. As shown in Figure 2 (a), T3 and T4 yielded the maximum validity coefficient of 0.72 indicating the most critical factors to measure TECH1 construct are the browsing speed and course website ease of use.

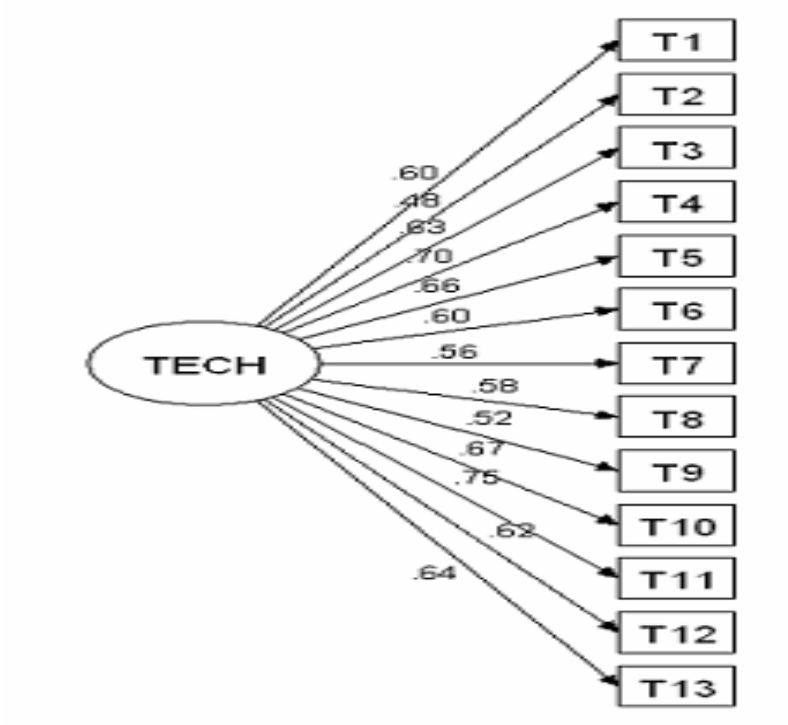

Figure 1 Technology Confirmatory Factor Model

The TECH2 factor, shown in Figure 2 (b) was comprised of indicators related to IT infrastructure reliability and effectiveness. T7 measured student-student communication reliability, T8 measured student-instructor communication reliability, T9 measured consistency of computers access using the same authentication, T10 measured computer labs availability to students, T11 measured consistency of computer network reliability and T12 measured consistency of student information system efficiency, and T13 measured overall IT infrastructure efficiency. The TECH2 confirmatory factor model was examined and yielded good fit measures and achieved the recommended levels. As shown in Figure 2 (b), T11 was the most valid indicator with coefficient value of 0.80. This indicated to the criticality of computer network reliability to students. Also, T10 showed high validity coefficient in support to T11 criticality, and it indicated to the criticality of computer laboratories availability to students.

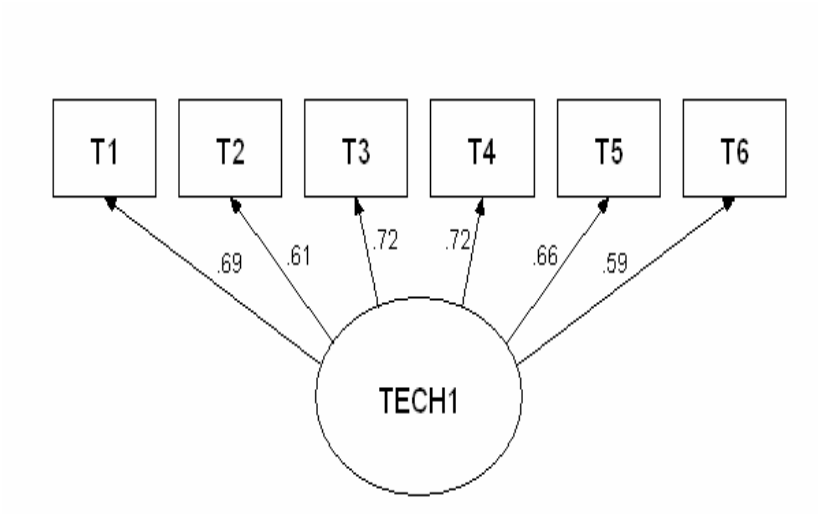

(a)

Figure 2 (a) Technology Confirmatory Factor Model – TECH1

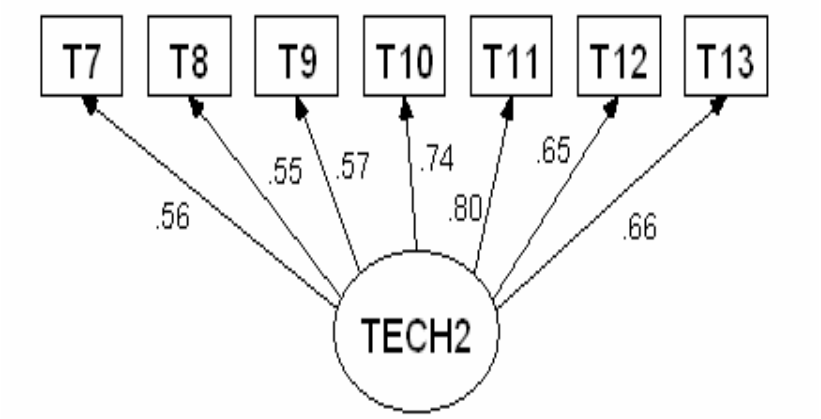

(b)

Figure 2 (b) Technology Confirmatory Factor Model – TECH2

The Support Confirmatory Factor Model

Figure 3 shows the SUPPORT confirmatory factor model. It was measured using five indicators. SP1 measured the availability of library services, SP2 measured the availability of help desk, SP3 measured the student overall satisfaction with the university support to e-learning, SP4 measured the availability of computers to practice, and SP5 measured the availability of printing facilities. The fit measures of SUPPORT model satisfied the acceptance levels indicating the adequacy of validity of the model.

SP2 indicator had the maximum validity coefficient of 0.72 indicating that this indicator is the most critical success factor among the five indicators. It can be concluded that the availability of technical support or help desk is the most critical success factor that can be used to measure the university support to e-learning initiatives available.

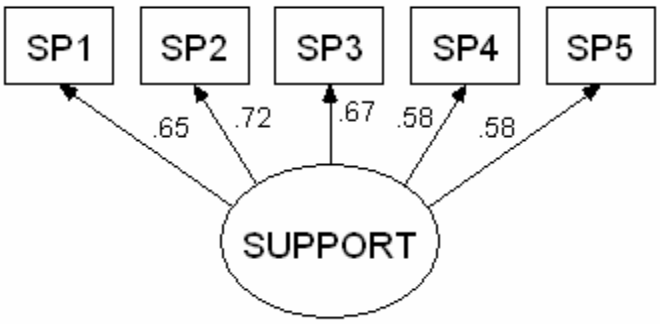

Figure 3 Support Confirmatory Factor Model

CONCLUSION AND FUTURE WORK

Nowadays e-learning has become an accepted educational paradigm across many higher educational institutions worldwide. An understanding of critical success factors (CSFs) which influence student perspective is important as many higher educational institutions endeavor to attract and retain students to adopt e-learning courses or programs. This study determined the critical factors affecting e-learning acceptance by universities from students' perspective and evaluated the criticality level of two CSF categories: technological and institutional support. A sample of 274 enrolled students was used to identify and measure the proposed e-learning CSFs.

In the technological dimension, the technology access (TECH1) category included six factors. It was found that the browsing speed and ease of use of course website were the most critical factors with 0.72 validity coefficiency. The findings reported here are consistent with the findings reported in previous studies (Selim, 2005; Volery & Lord, 2000).

On the other hand, technology infrastructure (TECH2) comprised of seven factors. The results showed that the computer network reliability to students was the most critical factor with 0.80 validity coefficient. Computer labs availability to students came in the second place of criticality with 0.74 validity coefficient. These findings are contrary with the previous research conducted by Selim (2005). Selim discovered that the availability of computer labs for practice was the most critical factor in technology infrastructure

category. This may be due to the environment differences.

For the institutional support dimension (SUPPORT), the availability of technical assistant or help desk was the most critical success factor. This finding is supported by previous studies (Soong et al., 2001; Selim, 2005).

The findings of this study suggest that it is necessary for university administrators and faculty be cognizant of technological and institutional support factors based on student perspectives that affect success in e-learning when attempting to adopt e-learning courses or programs. This study indicates that technological and institutional support factors play important role in the usage of e-learning.

This study is limited to investigate the students' perspective only. For future work, there is a need to investigate the e-learning CSFs from the instructors' perspective. Moreover, there is a need to expand this study to include perceived ease of use and perceived usefulness as the measures of e-learning success. In other words, a more extensive scope is needed to examine the relationships in a broader context.

ACKNOWLEDGEMENTS

The authors would like to extend our thanks to all our reviewers for the valuable comments and insights they have provided.

REFERENCES

Albright, J. J. (2006). Confirmatory factor analysis using AMOS, LISREL, and MPLUS. Retrieved December 20, 2007, from http://www.indiana.edu/~statmath

Arbuckle, J. L. & Wothke, W. (1999). AMOS 4.0 user's guide. Chicago: Small Waters Corporation.

Bollen, K. A. (1989). Structural equations with latent variables. New York, NY: John Wiley & Sons.

Bollen, K. A. & Long, J. S. (1993). Structural equations with latent variables. New York: John Wiley & Sons.

Byrne, B. M. (2001). Structural equation modeling with AMOS: Basic concepts, applications, and programming, New Jersey: Lawrence Erlbaum Associates.

Hassan, S. (2002). Government and e-learning: Harnessing e-learning in the education sector. Proceedings of the National Conference on E-learning 2002, Putra World Trade Center, Kuala Lumpur, July 4-5.

Khan, B. H. (2005). E-learning QUICK Checklist. Hershey, PA: Information Science Publishing. Retrieved December 30, 2007, from http://BooksToRead.com/checklist.

Kline, R. (2004). Principles of practice of structural equation modelling, Guildford, New York: NY.

Masrom, M. (2004). The AMOS approach to structural equation modeling. Proceedings of the 12th Mathematical Sciences National Symposium, International Islamic University Malaysia Kuala Lumpur, Malaysia. December 23-24.

OECD (2005). E-learning in tertiary education: Where do we stand ? *Education & Skills*, 4, 1-293.

Raja Maznah, R. H. (2004). E-learning in higher education institutions in Malaysia. *E-mentor*. 5 (7), 72-75.

Selim, H. M. (2005). Critical success factors for e-learning acceptance: Confirmatory factor models, *Computers and Education.* Retrieved December 30, 2007, from http://www.elsevier.com/locate/compedu.

Volery, T. and Lord, D. (2000). Critical success factors in online education, *The International Journal of Education Management*, 14 (5), 216-223.

Zainon, O., Masrom, M. & Rahiman, R. (2007). A preliminary study of e-learning critical success factors: The student perspectives. Proceedings of the UiTM International Conference on E-learning – UiCEL2007, University Technology MARA Shah Alam, Selangor, Malaysia, December 12-14.