Data Acquisition Process in Optical Tomography : Signal Sample and Hold Circuit

R Abdul Rahim, L C Leong, , K S Chan and J F Pang

Process Tomography Research Group (PROTOM), Department of Control & Instrumentation Engineering, Faculty of Electrical Engineering, Universiti Teknologi Malaysia, 81310 UTM Skudai, Johor, MALAYSIA, ruzairiabdulrahim@yahoo.co.uk

ABSTRACT

This paper describes the application and construction of signal sample and hold (S/H) circuit to facilitate data acquisition process using the Keithley Metrabyte DAS 1802HC. A basic tomographic system consists of sensors, signal conditioning circuit, data acquisition system and the creation of suitable computer software to display the reconstructed image obtained from pipeline. The analogue signals, which are also the data needed for image reconstruction have to be managed properly, in terms of minimizing the data transfer time from the signal conditioning circuit to the data acquisition card. Besides having a "DC memory" characteristic which can easily be converted into digital format, the sample and hold circuit also has the ability of sampling a segment of waveform and holding it until the proper timing for conversion of the required control signal. In order to generate the relevant signals to control both the signal sample and hold circuit and the data acquisition card, the PIC microcontroller is being used. With the combination of signal sample and hold circuit and microcontroller, transition of analogue signals to the data acquisition system can be performed efficiently.

Keywords Signal sample and hold circuit, analogue signals, microcontroller, data acquisition system.

1 INTRODUCTION

Tomographic technology involves the acquisition of measurement signals from sensors located on the periphery of a process vessel or pipeline. The typical components and operation of a tomographic system are shown in Figure 1.

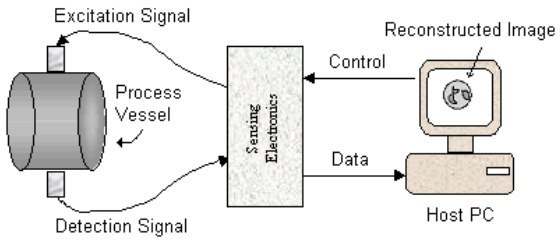

Figure 1: Principal components of a process tomography system.

The basic idea is to install a number of sensors around the pipe or vessel to be imaged. Control signals are sent to the sensing electronics circuit, which sends appropriate excitation signals to the system under test. The resulting signals are obtained through the receivers and sensing electronics and then passed to the computer (PC) through data acquisition system. The host computer is used to reconstruct a tomographic image of the cross-section being observed by the sensors. This paper will present the signal control and data acquisition process using the microcontroller and also signal sample and hold circuit.

2 SIGNAL SAMPLE AND HOLD (S/H) CIRCUIT

The sample and hold or S/H function is one which is basic to the data acquisition and analogue to digital (A/D) conversion process. In most applications, the sample and hold is used as the "front-end" to an A/D converter in data acquisition systems (Jung, 1995). Most designers are familiar with the sample and hold amplifier as a system component which is utilized in high speed data acquisition work. In these applications, the S/H amplifier is used to store analogue data which is then digitized by a relatively slow A/D converter. In this fashion, high speed or multiplexed analogue data can be digitized without resorting to complex and expensive ultra-high speed A/D converters.

Basically, a sample and hold amplifier circuit has two basic and distinct operational states. In the 'SAMPLE' stage, an input signal is sampled and simultaneously transmitted to the

output. For the 'HOLD' stage, the last value sampled is held until the input is sampled again. When the S/H goes into the 'HOLD' stage, the S/H switch opens and the voltage stored by the hold capacitor settles through the output buffer. The positive or negative bias current of the output buffer starts charging or discharging the hold capacitor. This degradation of the hold capacitor's voltage over time is known as the "droop rate" (Leonard, 1993).

The choice of hold capacitor is important as droop rate is part the major trade-offs in the selection of a hold capacitor value. The leakage of electrolytics and the transient behaviour of ceramics rule them out completely in this application. The best choice is probably polypropylene, and after that polystyrene or Mylar (National Semiconductor Corporation, 1995). Everything necessary for the S/H except the hold capacitor can be put on chip, so monolithic sample-and-hold circuits, like the LF398, are available and very easy to use.

The S/H command is given through a digital logic level, so these circuits interface directly with logic. Besides that, the LF398 has a hold step of less than 1mV, has an acquisition time of 4µs, features high input resistance and also has a low output resistance. Based on these advantages, the LF398 is selected for this research. The S/H circuit is illustrated in Figure 2 whereby Vo is the analog output voltage after amplification from the signal conditioning circuit while the SSH_DI is the digital logic signal generated by the microcontroller. C_h is the hold capacitor which has a value of 1.5nF and Vout is the output voltage for the sample and hold chip.

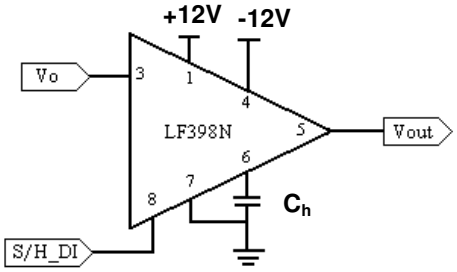

Figure 2: Sample and hold circuit.

3 MICROCONTROLLER CONTROLLING CIRCUIT

The Microchip PIC16F84A 14-bit microcontroller is the signal generator to control various circuits for this project such as the light transmitting circuit, sample S/H circuit and also supports the synchronization of data acquisition process between the hardware and software.

The main motivation to use the PIC16F84A microcontroller is because the device has sufficient requirements to support the needs of this project. Besides cost effective, it has only 35 instruction sets which are easy to learn and understand (Matic, 2000). In this signal controlling circuit that has been designed, the micro controller is used to control the duration of light projection, sample and hold digital input and data acquisition system (DAS) synchronization signals. For all the requirements that are needed to control the above signals, only the basic understanding of input-output port of the microcontroller is needed.

From the diagram, pins RB0 to RB7 are bi-directional I/O ports. RB0 has an extra function as external interrupt pin. RA0 to RA3 pins are also bi-directional I/O ports but then the RB0 to RB7 pins are sufficient to be used when generating signal controls. The circuit connection of the microcontroller is shown in Figure 3.

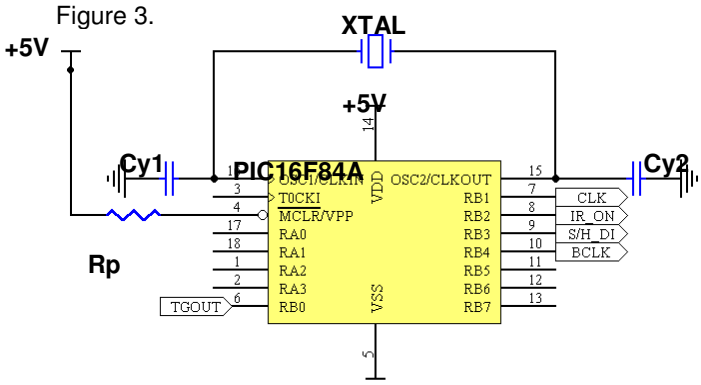

Figure 3: PIC16F84 circuit connection.

Meanwhile, the XTAL is the crystal oscillator and the value of this crystal used is 2MHz with two ceramic capacitors (a value of 22pF each). For the I/O pins, RB0 functions as an input pin (TGOUT input from the DAS) while RB1, RB2, RB3 and RB4 are output pins for clock (CLK), signal to control the duration of 'on' and 'off' state of the infrareds via decoder (IR_ON), digital input control of sample and hold circuit (S/H_DI) and also the burst clock (BCLK) to signal DAS to start its data conversion process (BCLK). For the application of S/H and data acquisition process in this paper, only the S/H_DI and BCLK will be highlighted.

4 DATA ACQUISITION PROCESS

For the purpose of converting the analogue signals from the signal conditioning circuit before the data is being processed by the computer for image reconstruction, the Keithley DAS-1802HC high speed data acquisition board has been selected. It is a high-performance data acquisition board that have 64 single-ended or 32 differential analogue input channels at 12 bits of resolution (Keithley Instruments, 1999). Figure 4 shows the data acquisition process system.

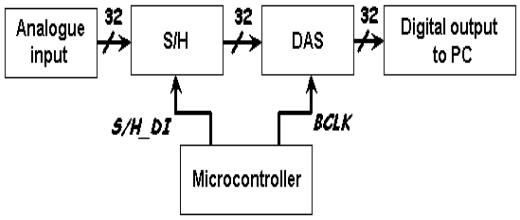

Figure 4: Data acquisition process.

Analogue input from the hardware system goes through the sample and hold circuits before being sent to DAS for analogue to digital conversion. The S/H_DI sends a signal from the microcontroller to the S/H circuit to sample all output signals for a short period of 10µs and then continue to hold the sampled output signals until it receives the next rising edge. At the same time when the S/H signals are on hold, the BCLK signal will send a positive edge signal to the DAS to start data conversion as shown in Figure 5. The total duration of the data conversion time depends on the maximum burst mode clock frequency of 333 kHz in for this DAS.

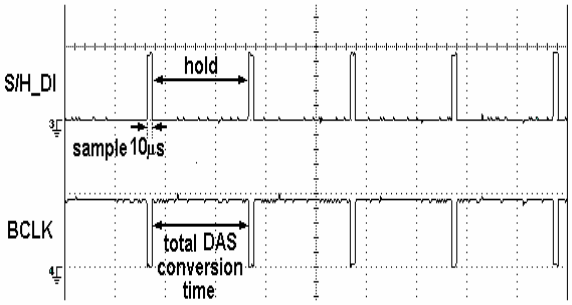

Figure 5: S/H_DI and BCLK signals

When there are many analogue inputs that are needed to be converted into digital outputs, the sample and hold circuits come in handy. For example, in this paper, there are 32 analogue inputs fed in parallel into the 32 channels DAS buffers. A single digital input control signal from the microcontroller will request all 32 individual sets S/H circuits to sample all the analogue signals synchronously. All the signals on-hold will be sent also in parallel to the DAS for data conversion. This will save execution time whereby all 32 analogue signals need not wait to be sampled in serial, which is sampling the 1st, followed by 2nd signal, 3rd signal until 32nd analogue signals. Figure 6 illustrates an example of the analogue and digitalized S/H output signals for Channel 23.

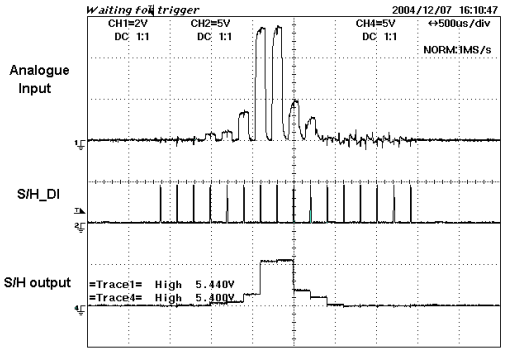

Figure 6: Sample and hold execution.

5 CONCLUSIONS

The implementation of the signal sample and hold circuit is able to facilitate the communication of the hardware system with DAS 1802HC as the gateway to interface with the computer. With the assistance of the microcontroller circuit, the data acquisition and conversion timing can be synchronously controlled. When the signal sample and hold circuit is integrated together with the microcontroller in the data acquisition process, the transition of analogue to digital signals can be performed smoothly for a large number of data. The proposed system is capable to be integrated into the tomography system to attain a more convenient and efficient data acquisition process.

6 REFERENCES

JUNG, W. (1995). *Applying IC Sample-Hold Amplifiers*. U.S: Analog Devices Inc.

LEONARD, B. (1993). *Picking the Right Sample-And-Hold Amp for Various Data-Acquisition Needs.* U.S.: DATEL Inc.

NATIONAL SEMICONDUCTOR CORPORATION (1995). *Monolithic Sample-and-Hold Circuits*. U.S: National Semiconductor.

MATIC, N. (2000). *The PIC Microcontroller*. U.S.: Microchip.

KEITHLEY INSTRUMENTS (1999). *DAS-1800HC Series User's Guide*. United States: Keithley Instruments Inc.