Wan Akib and Saari/Geoinformation Science Journal, Vol. 3, No. 1,pp. 29-39

The Terrain Effects in Gravity Field Modelling With Respect To Gridded Topographic Spacings

[1]Wan Abd. Aziz Wan Akib and [2]Raduan Saari

[1]Department of Geomatics Engineering
Faculty of Geoinformation Science and Engineering
waziz@fksg.utm.my

[2]Faculty of Civil Engineering
Universiti Teknologi Malaysia
Skudai 81310, Johor, Malaysia

Abstract

A major part of high frequency gravity signals is governed by the masses of the topography. Practically, this effect can be evaluated by using the integration formula of terrain corrections. In this study, the topographic conditions are classified as: Block I (flat), Block II (hilly) and Block III (mountainous). The analysis of the results indicated that the terrain effects is very significant for gravity field information in rough terrains compared to relatively flat areas. A denser grid spacing of Digital Elevation Model (DEM) would contain a lot of gravitational features, especially in the rough terrains. In contrast, for the flat areas, the effect of topographic masses is insignificant, resulting in very small magnitudes as would be expected.

Key words : Terrain effect, Gravity Field Parameter, Numerical Integration

1. Introduction

The term 'terrain' in general includes both topography and bathymetry. Unlike topography, the bathymetry typically represented as negative heights and has a strong terrain effect in the marine environment. In gravimetric solutions (e.g. geoid height and deflections of vertical), the major part of short wavelength gravity field variations (high frequency gravity signals) is caused directly by the terrains. The terrain affects gravity field estimation parameters in two ways:

(i) A strong signal due to the gravitational attraction of the topographic masses itself.

(ii) The topography implies that the basic observation data, i.e. gravity anomalies are given on a non-level surface, violating the basic requirements for Stokes' Integral.

The impacts of the terrain corrections is to remove the correlation of free-air anomalies with height, and also to avoid the 'aliasing effect' because in most cases, gravity points have a tendency to be located in lowland areas and valleys, in mountainous areas, see Forsberg (1984). Such aliasing effects caused by undersampling gravity data can be very significant and devastating for geoid height and deflection of vertical estimations. Since the principal use of terrain data in local gravity field modelling is to provide a smoother residual field making estimation much more easier, accurate Digital Elevation Model (DEM) are very useful, especially in rough mountainous areas.

In local gravimetric solutions, the terrain corrections may be applied in a 'remove-restore' processing as follow

(i) The terrain effects are first removed from observation before prediction (estimation) takes place, and

(ii) The terrain effects are restored for final solutions.

The general remove-restore technique is very crucial when working with gravity field modelling in rough topography considering that terrain effects are most influenced by features near the point of computation. Thus, large aliasing errors due to undersampling are always a problem. In practice, the computation of local/regional geoid undulation (N) and deflections of vertical component. (η, ξ) is carried out by combining a contribution from a global geopotential model (GM) for long wavelength signals, free-air anomalies (Δg) for medium wavelength signals, and heights (h) from DEM for short wavelength signals. This contribution symbolically can be written as $N = N_{GM} + N_{\Delta g} + N_h$ for geoid height; and $\eta = (\eta_{GM} + \eta_{\Delta g} + \eta_{\eta})$, ; $\xi = (\xi_{GM} + \xi_{\Delta g} + \xi_{\eta})$ for deflections of vertical. This paper concerns with the evaluation of the terrain effects with respect to grid spacings in the gravity field modelling for Peninsular Malaysia.

2. The Terrain Data

The irregularities of the local gravity field, especially in the mountainous areas, can be smoothed by a suitable gravity field terrain correction. To do this, we need some forms of height data. In this study, 'detailed terrain or height data' for the three test areas (denoted as Block 1, Block II and Block III, respectively) have been obtained from the Department of Surveying and Mapping, Malaysia (JUPEM). These heights data were based on large scale map 1: 50,000 and they can be considered as 'true' heights (elevations). It can be expected that the accuracy of heights varies from about ± 1 meter for spot heights and points through which contour pass, to about ± 10 meters, in between contours where gridded height data are interpolated. The locations, grid intervals and mean heights for these test areas are given in Table 1

Test Area	**Geographical Location**	**Grid Interval (mean height)**
Block I	$1° 15' \le \phi \le 1° 49'$ N $103° 15' \le \lambda \le 104° 17'$E	2' x 2' (20 m)
Block II	$2° 33' \le \phi \le 3° 38'$N $101° 37' \le \lambda \le 102° 26'$E	1' x 1' (210 m)
Block III	$4°04' \le \phi \le 5° 53'$N $100° 58' \le \lambda \le 101°46'$E	30" x 30" (540 m)

Table 1 - The test areas for terrain computations

Figures 1(a), (b) and (c) shows the perspective view of regional topography for the test areas with respect to types of terrains, respectively. The topographic features of Block I in Figure 1(a) (which is the Southern part of Johor State) is appearing as a flat region (elevation range from 0 to 250 m), while the area of Block III in Figure 1(c) is flanked by mountains of the Titiwangsa Range with elevation range from 0 to 2100m. The topographic features of Block II (Klang Valley and Genting Highland areas - see Figure 1(b)) is evident as a relatively flat to medium rugged terrains where the range of elevation is between 0 to1600 m. In general, what we can see from these figures is that, there would be some correlations between variability in ruggedness and elevations, i.e. the terrain area becomes more rugged with the higher elevations.

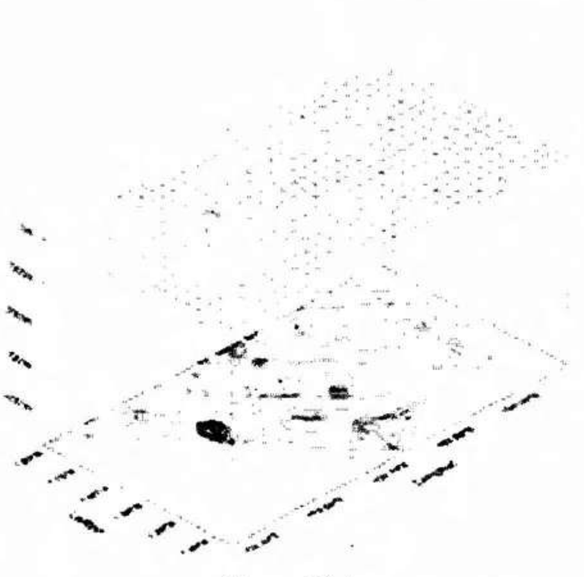

Figure 1(a)
The 2D and 3D topographic features
for block I

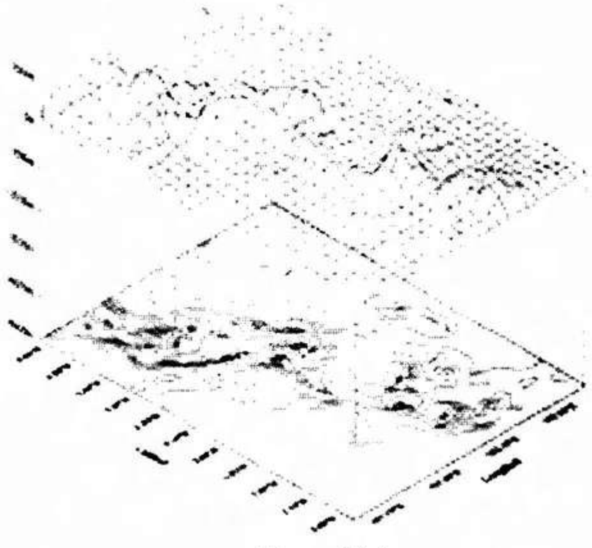

Figure 1(a)
The 2D and 3D topographic features
for Block II

Figure 1(c)
The 2D and 3D topographic features for block III

To study the effects of grid spacing in terrain computations, the corresponding test areas were also divided into two grid intervals, that is 2′ x 2′ and 7.5′ x 7.5′. These grid spacings were interpolated (i.e. regridding) from the main gridded height data (detailed heights, see Table 1) by using a bicubic spline function interpolation technique. Detailed of this technique is fully described in Bojanov et.al. (1993). For a practical computational viewpoint, this procedure is quite reliable for studying the variations of short wavelength gravity fields in the area of interest. This is due to the fact that a denser gridded DEM (especially in rough terrains) would contain a lot of information of high frequency gravity signals compared to sparsely gridded DEM. Table 2 summarised the height information and number of computation points in the test areas with respect to the grid spacings.

Table: 2 – The grid spacing of height data for terrain computations

Grid Spacing	Block I Mean height No. of computation points	Block II Mean height No. of computation points	Block III Mean height No. of computation points
2′ x 2′	17 m 576	205 m 825	530 m 625
7.5′ x 7.5′	15 m 45	170 m 63	470 m 49

3. The Terrain Computations

This section summarizes some formulas and basic properties of terrain effects in gravity field modelling. More details can be found in Schwarz et. al. (1990). To complete the calculation of the gravity effects of the terrain, we must determine the contributions to gravity from topography on the Bouguer plane.

Considering a point P at the surface of the topography the total gravity topographic effect at P may be split into a Bouguer plate effect and the terrain correction (c). c is an auxiliary numerical integration given by an integral over the irregularities of the topographic mass body relative to a Bouguer plate passing through the computation point P(xp, yp , zp). In a planar coordinate system and for a constant density ρ, we have:

$$\Delta g_h = 2\pi G\rho h - c \qquad \ldots(1)$$

and

$$c = G\rho \iiint \frac{z - h_p}{[(x_p - x)^2 + (y_p - y)^2 + (z_p - z)^2]^{3/2}} dxdydz \qquad \ldots(2)$$

When expanding the integration in equation (2) about the z = hp, the above formula can be written as 'linear approximation' as:

$$c = \frac{1}{2} G\rho \iint \frac{(h - h_p)^2}{r_0} dxdy \qquad \ldots(3)$$

where, the quantity of element r0 is given by :

$$r0 = [(xp - x)2 + (yp - y)2]^{3/2} \qquad \ldots(4)$$

Practically, to evaluate the above integral formula, both the density distribution of the surface materials and the shape of the land surface must be known. The first problem is solved by assuming equal to the Bouguer density, and the second is handled by the use of templates (see Dobrin and Savit (1988)).

The accuracy of the above formula is usually sufficient (in r.m.s. sense), although large errors are possible for gravity points with large terrain slopes in the vicinity of the points (Forsberg, 1984). For quantities other than gravity anomalies, for example, in the case of deflections of the vertical, analogous linear approximation is give by the following formula:

$$\begin{Bmatrix} c_\xi \\ c_\eta \end{Bmatrix} = \frac{G\rho}{\gamma} \iiint \frac{z - h_p}{[(x_p - x)^2 + (y_p - y)^2 + (z_p - z)^2]^{3/2}} \begin{Bmatrix} y_p - y \\ x_p - x \end{Bmatrix} dxdydz \qquad \ldots(5)$$

This represents the total terrain effects, as the Bouguer plate contribution is equal to zero. Expanding the denominator, we have:

$$\frac{1}{[(x_p - x)^2 + (y_p - y)^2 + (z_p - z)^2]^{3/2}} = \frac{1}{r_0^3} - \frac{3}{2} r_0^{-5} (h_p - z)^2 \qquad \ldots(6)$$

with ro is given in equation (4).

When computing topographic effects, the second term of functional $\Delta g = - dT/dr - (2/r)T$ is introduced, and it is called an 'Indirect Effect' on gravity signals. This term is often explained using the concept of gravity reduction from the geoid to a new geopopential surface called as a 'co-geoid'. The Indirect effect is given by:

$$\Delta N_T = \pi \rho \gamma^{-1} H_A^2 - G\rho R^2 \gamma^{-1} / \sigma \sum (H_i^3 - H_A^3)\, l_r^{-3} A_i \quad \ldots(7)$$

The correction formula in equation (7) is very important quantities since it is dependent on the topography surrounding the gravity points. In practice, the rectangular prisms of constant density is useful 'building block' for numerical integration of the above equations.

Practically, in order to speed up the computation process, and to allow use of less detailed (remote topography), it is advisable to use a coarse and detailed height data. The detailed height data is used out to a minimum distance, while the coarse grid is used for the reminder of the topography, see Figure 2.

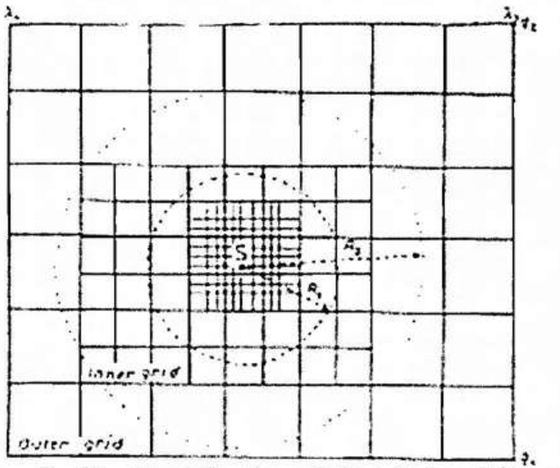

Figure 2 - The Contribution of Detailed and Coarse Height Data System

Since the gravity terrain effects are strongly dependent on the height of the computation point (through the $2\pi G \varrho h$ term), a special precaution is necessary when the height of the computation point does not agree with the interpolated height from the DEM. However, the discrepancy between the DEM and station heights will always be present, because the DEM's will hardly ever have sufficient resolution to represent all features, especially in rugged topography. In this study, since the computation point is the same position with gridded height data (see grid spacings in Table 2), the height discrepancies were not exist.

For the implementation of the terrain computations, 'coarse elevations' were interpolated from the detailed height data for each of the test area, using bi-linear interpolation technique. The detailed and coarse elevations may or may not have common boundaries. This interpolation procedure creates 1′ x 1′, 2′ x 2′ and 3′ x 3′ gridded coarse elevation data for Block I, Block II and Block III, respectively.

4.Results and Analysis

Using the formulas for the gravitational effects of a homogeneous rectangular prism and the height data sets, the contribution of terrain in gravity field modelling for the test areas was computed using a modified TC program. This program is an adaptation of the latest GRAVSOFT Software Package, developed at the National Survey and Cadastre, Denmark. As mentioned in previous section, the terrain effects on gravity field was studied for specified grid spacings in the test areas.

The computations were carried out to a fixed radius based on these grids. In this case, the majority of the high frequency effects of the anomalous gravity field were due to very near topography.

Table 3 contains the results that are associated with the terrain contribution for these anomalous gravity field for each of the test area. Figures 3 (a) to (f) depict the 2D and 3D features plots of terrain effects on the gravity field parameters (Δg_T, ΔN_T, ξ_T and η_T) for the test areas with respect to grid spacings of 2′ x 2′ and 7.5′ x 7.5′, respectively. The following discussions will be focused on the results given in Table 3 and illustrated in Figures 3(a) to (f) (see Appendix I).

From Table 3, it can be seen that the terrain contribution to the geoid height (indirect effect) can be in the order of decimeters in the rough topography in Block II and Block III where it will become the dominant source of systematic error. It is apparent from Figures 3 (a) and (b) that the terrain contribution on gravity anomalies and the indirect effect is not significant for flat terrain such as Block I.

In contrast, high frequency gravity field information is gained by the terrain effect for rough areas of Block II and Block III, see Figures 3 (c) to (f). For example, terrain contribution in Block I for gravity anomalies and indirect effect amount to about 50 mgals (mean value) and over 2 meters (mean value), respectively. Similarly, it is obvious to see from this table that magnitude of the terrain effects on deflections of vertical is also relatively larger for Block II and III, compared to Block I.

By examining the overall results with respect to the grid spacings of 2′ x 2′ and 7.5′ x 7.5′ used in this study, it can be said that the terrain effects have dominated the characteristics of local topographic masses in the expected manner.

Gravity Field Parameters	Block		Block II		Block III	
	2′ x 2′ Grid	7.5′ x 7.5′ Grid	2′ x 2′ Grid	7.5' x 7.5' Grid	2′ x 2′ Grid	7.5' x 7.5' Grid
Gravity Anomaly (Δg_T) in mgals	1.91	1.60	21.64	18.72	54.85	50.00
Indirect Effect (ΔN_T) in meters	0.072	0.060	21.64	0.791	2.272	2.025
North-South component for Deflection of Vertical (ξ_T) in arc of seconds	-0.082	-0.055	-0.285	-0.237	-0.675	-0.541
East-West component for Deflection of Vertical (η_T) in arc of seconds	-0.012	-0.013	0.171	0.030	-0.912	-0.823

Table 3 – Computed Terrain Contribution of the Earth's Gravity Field Parameters

In other words, the high frequency of the gravity field will revealed more signal information with denser grid spacing of the DEM, especially in the mountainous regions. This has been revealed by shorter wavelength components are apparent in the rough terrains. In contrast, the variation of grid spacing in lowland areas did not contribute any significant changes in the gravity field information see Figure 3(a) and (b).

From the table, an analysis of the terrain effects has shown that there is strong correlation with the rough topography compared to the medium and smoother area. For example, the use of terrain effects introducing high frequency gravity field information in mountainous areas (see Block III in Figures 3(e) and (f)) implying strong gravity signal due to the gravitational attraction of the topographic masses.

It is clearly seen that in the rugged terrains, the terrain effects completely dominate the shorter wavelength variations of the gravity field information. In contrast, for flat areas, the effect of topographic masses is insignificant, resulting in very small magnitudes, as would be expected regardless of gridded height spacings.

5. Conclusion

From the results and analysis presented in the previous section, it appears that significant short wavelength gravity field information is gained by the terrain effects over rough terrains. This implies that a strong gravity signal is due to the gravitational attraction of the topographic masses and the gravity field will become distinctly smoother with much lower variations.

This is due to the fact that of high frequency the free air anomaly variation comes primarily from the influence of rough terrains. Thus, the terrain effect contribution is very important as reduced data tends to be more homogeneous for optimum solution of geoid height and/or deflections of vertical. The characteristics of the gravity field information will depend on the sample DEM data set.

A denser grid spacing of DEM would contain a lot of high frequency gravity field compared to bigger grid spacing of the DEM, especially for the rough terrains. Finally, it can be concluded that the terrain effects is completely dominate the local variation of the gravity field, and therefore some kinds of terrain reduction is indispensable when attempting gravity field modelling in the areas of interest.

References

Bojanov, D., Hokopian, H., and Sahakian, A., (1993): Spline Function and Multivariate Interpolation. Dordrecht Kluwer Academic Publishers.

Dobrin, M., and Savit, C., (1988) : Introduction to Geophysical Prospecting.4th. Edition, McGraw-Hill International Editions, Geology Series.

Ferland, R., (1984) : Terrain Corrections for Gravity Measurements : UCSE Report No. 20009, Alberta, Calgary.

Forsberg ,R. (1984) : A Study of Terrain Effects and Density Anomalies '. OSU Report No. 355.

Heiskanen and Morits, (1967): Physical Geodesy. W.H. Freeman & Co. San Francisco, USA.

Petrie, G and Kennie T , (1990) : Terrain Modelling in Surveying ang Civil Engineering- Whittles Oublishing Co. London

Raduan S., (1997): Kesan Topografi Terhadap Parameter Medan Graviti Bumi'. Tesis PSM, FKSG, UTM

Schwarz, K..P., Sideris, M.G., and Forsberg, R., (1990): The Use of FFT Techniques in Physical Geodesy. Geophysical Journal Int. 100, pp.485 - 514.

Tscherning and Forsberg, (1996) : GRAVSOFT Package - National Survey and Cadastre, Denmark.

Appendix I

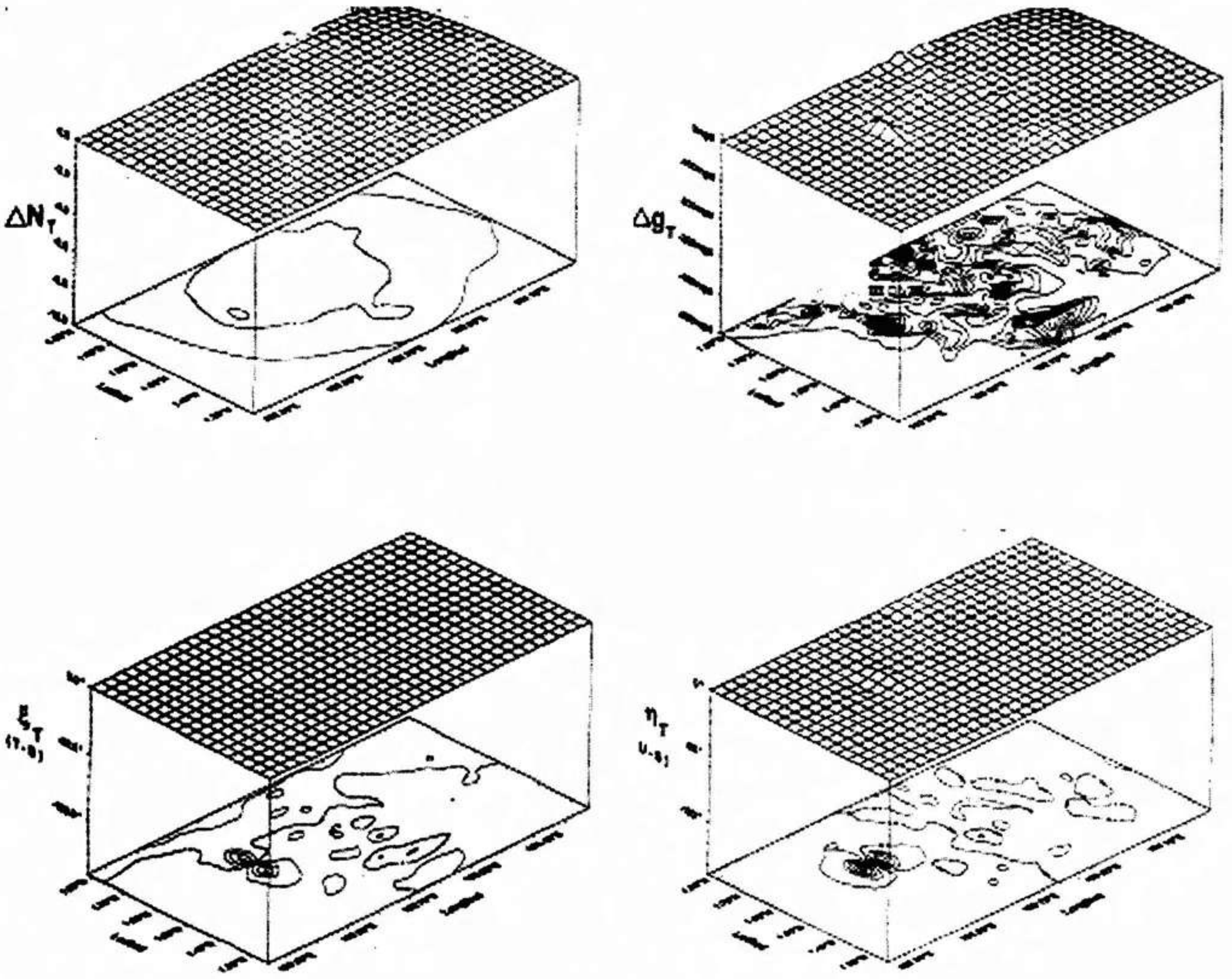

Figures 3(a) - Terrain effects for block I (Flat) - grid spacing 2′ x 2′

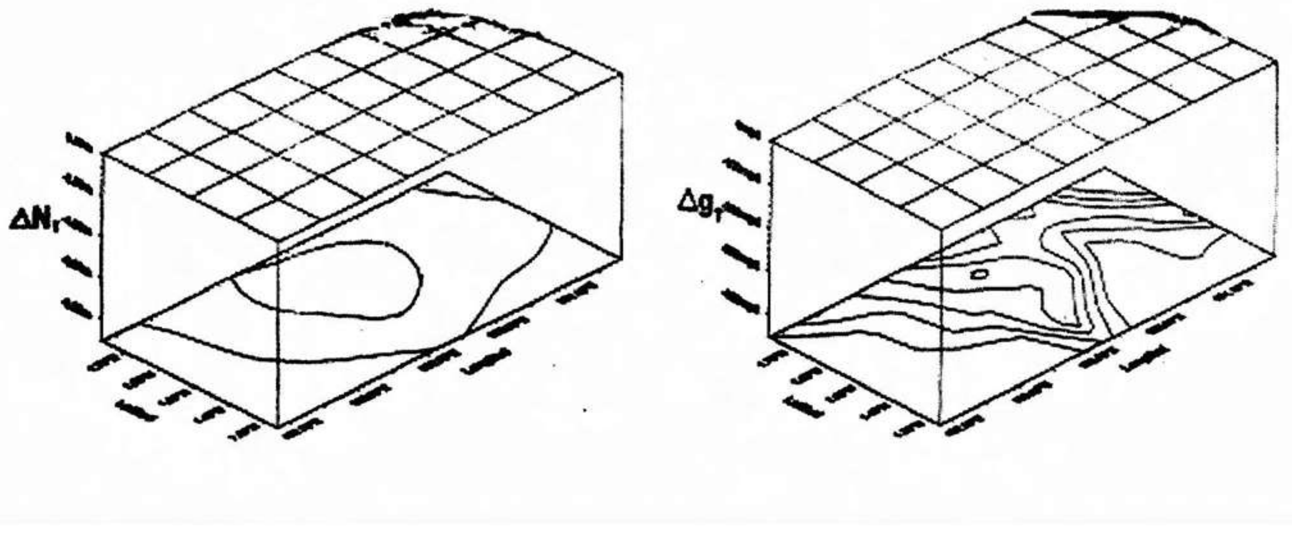

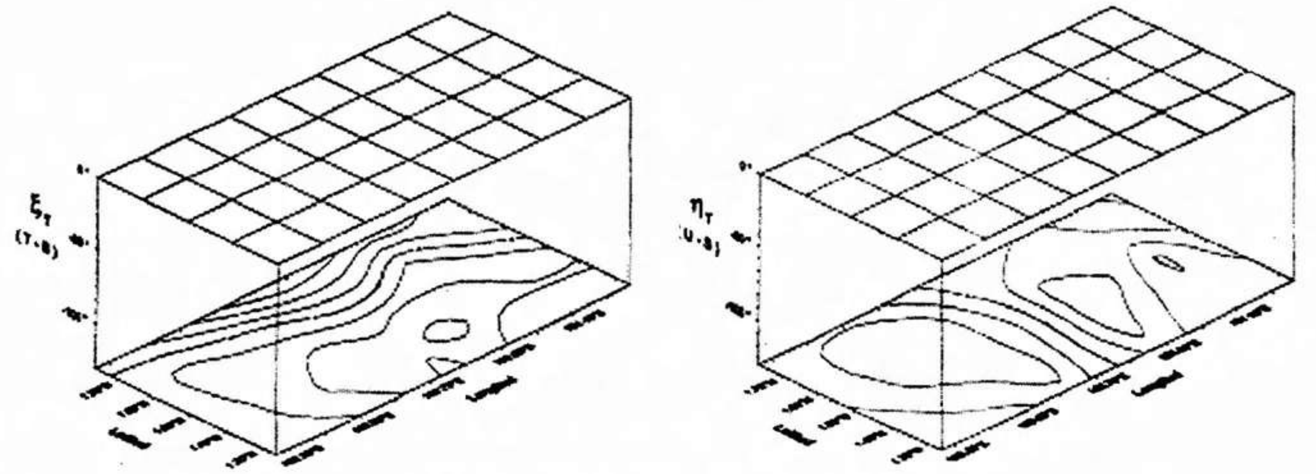

Figures 3 (b) - Terrain effects for block I (Flat) – grid spacing 7.5′ x 7.5′

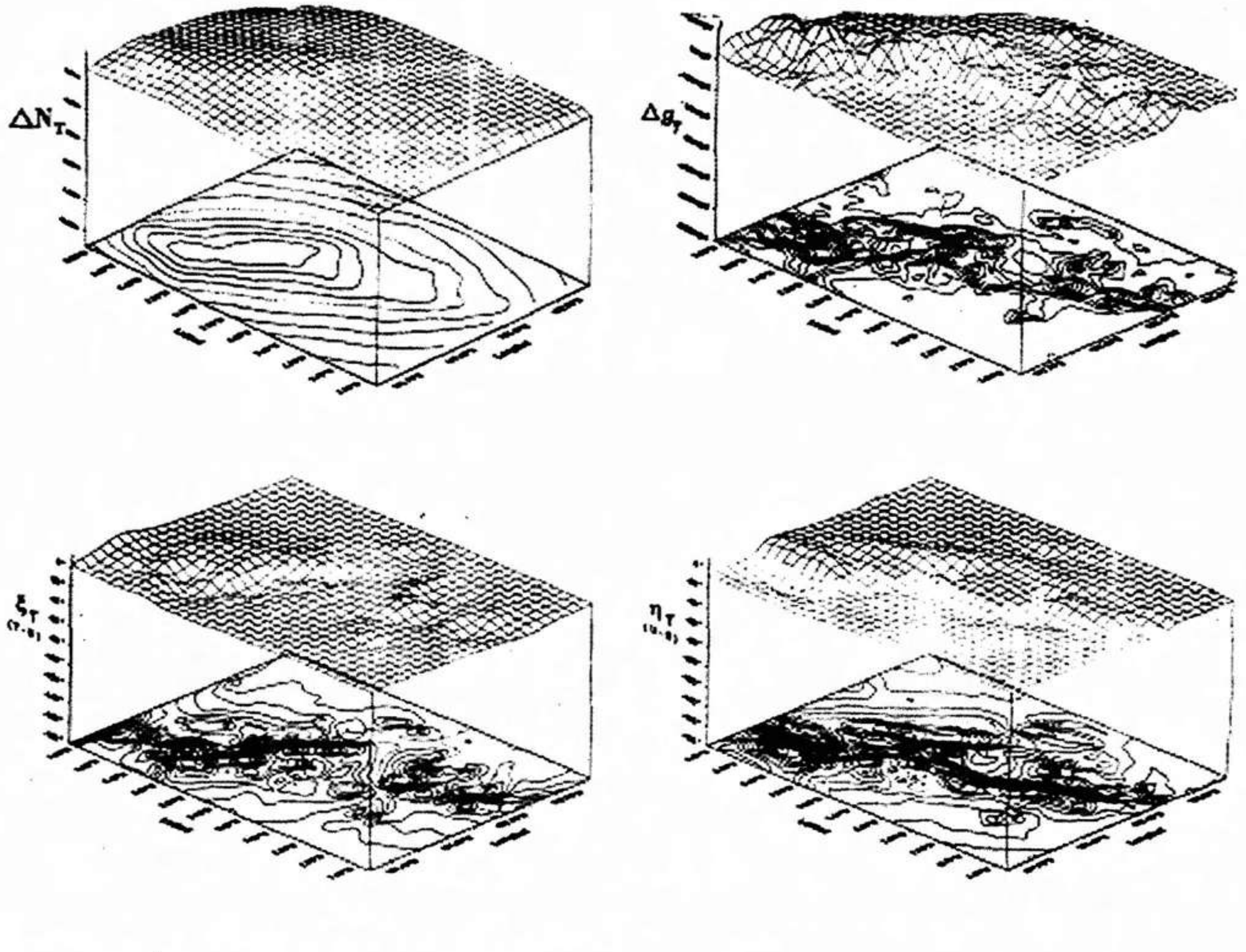

Figures 3 (c) - Terrain effects for block II (Hilly) – grid spacing 2′ x 2′

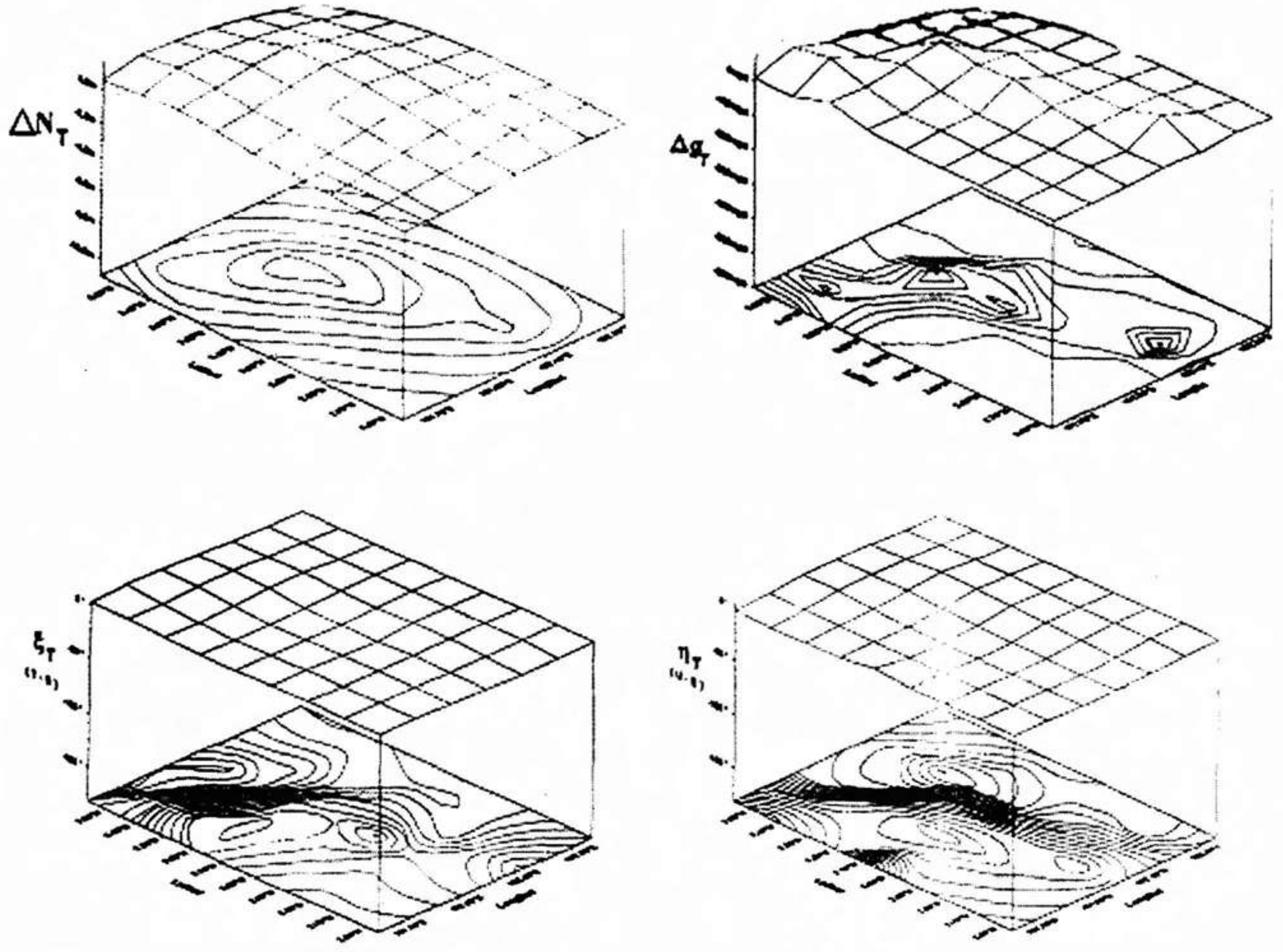

Figures 3 (d) - Terrain Effects for Block II (Hilly) – Grid Spacing 7.5′ x 7.5′

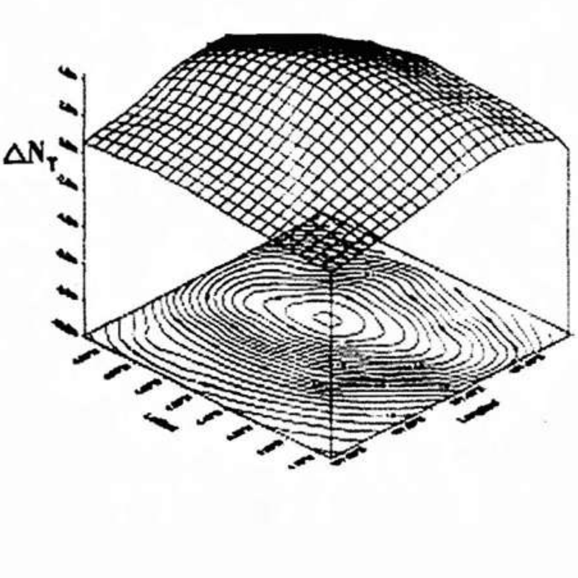

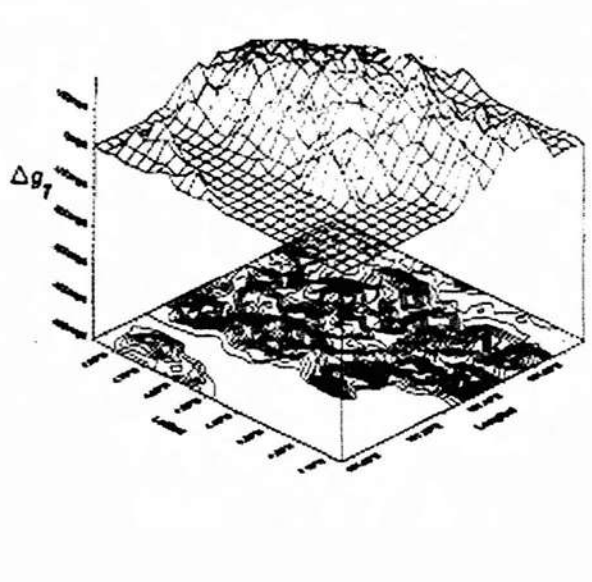

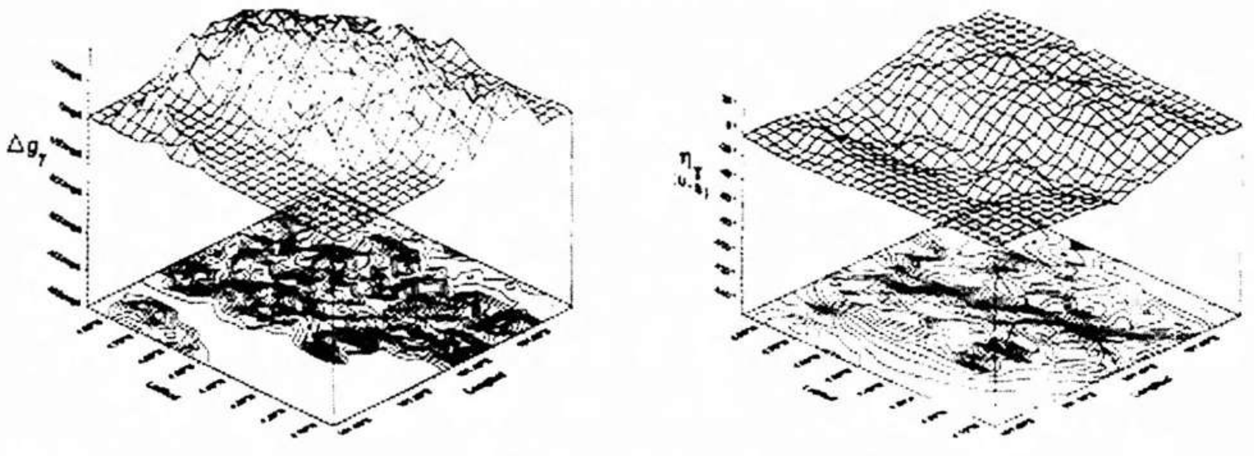

Figures 3 (e) - Terrain effects for block III (Mountainous) – grid spacing 2′ x 2′

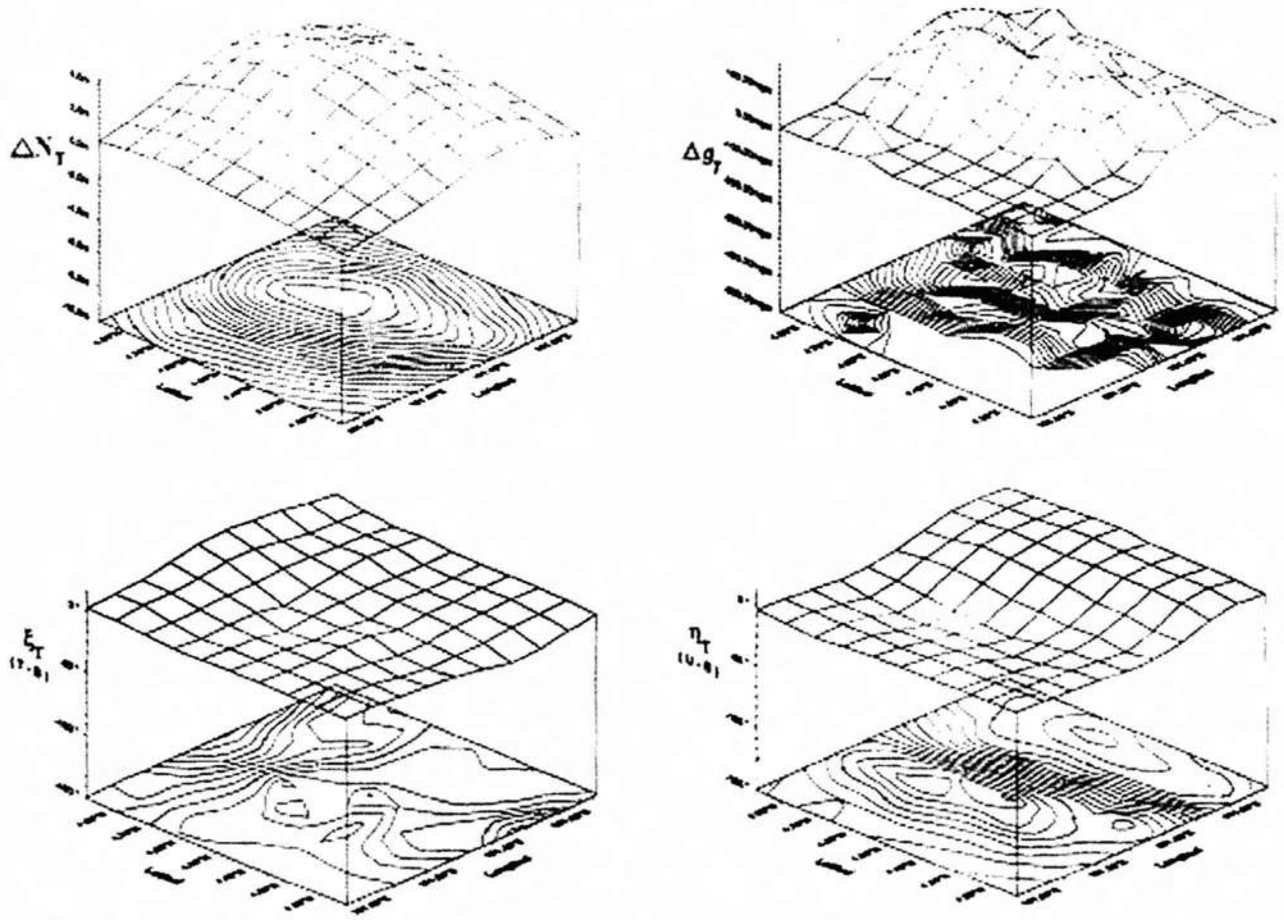

Figures 3 (f) - Terrain effects for block III (Mountainous) – grid spacing 7.5′ x 7.5′